PARTS LIST				
ITEM	QTY	PART NUMBER (IMPERIAL)	PART NUMBER (METRIC)	DESCRIPTION
1	1	OSMS33-300(XY)-INCH	OSMS33-300(XY)-M6	MOTORIZED TWO AXIS STAGE ENCLOSED BALL SCREW SERIES 33 TRAVEL 300MM
2	1	OSMS33-300(Z)-INCH	OSMS33-300(Z)-M6	MOTORIZED VERTICAL AXIS STAGE ENCLOSED BALL SCREW SERIES 33 TRAVEL 300MM
3	1	BRZ-14080UU	BRZ-14080EE	Z BRACKET FOR 120MM STAGES
4	1	OSMS-120YAW	OSMS-120YAW	ROTATION MOTORIZED STAGES 120MM DIAMETER

Note: Controllers and cables are needed to have a complete working system. Please visit our website at www.optosigma.com or contact your regions sales department for assistance.

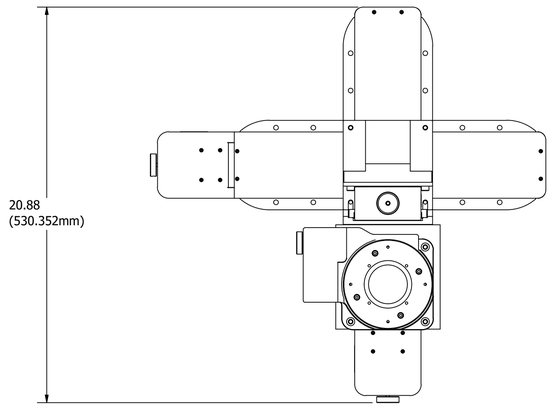

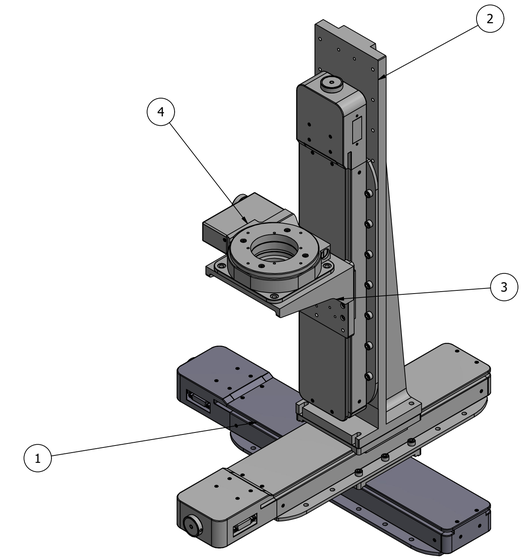

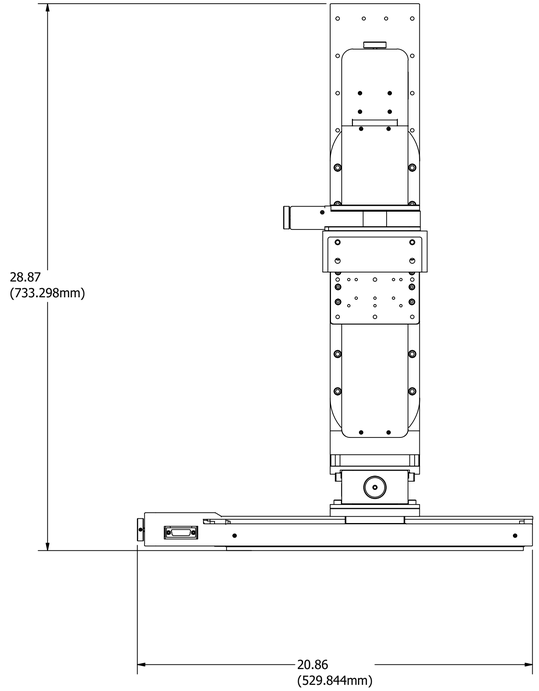

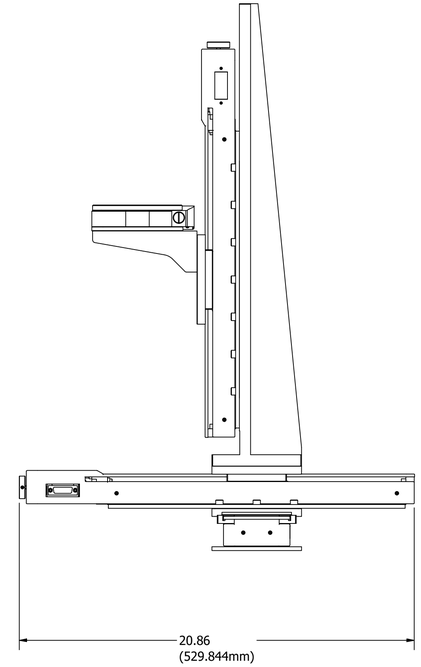

THIS DOCUMENT CONTAINS PROPRIETARY INFORMATION OWNED BY OPTOSIGMA CORP. AND MAY NOT BE USED, DUPLICATED OR DISCLOSED IN WHOLE OR IN PART FOR ANY PURPOSE INCLUDING DESIGN,MANUFACTURE OR PROCUREMENT WITHOUT THE WRITTEN PERMISSION OF OPTOSIGMA CORP.

OptoSigma

TOLERANCES		DRAWN BY	DATE	MATERIAL	CONTACTS:	REV.
FRACTIONAL ±0.1 ANGULAR ±0.5°		sean	4/5/2023		USA: sales@optosigma.com Europe: sales@optosigma-europe.com	
0.X	±.03	CHECKED BY	DATE	FINISH		
0.XX	±.01					
0.XXX	±.005	APPROVED BY	DATE	SCALE	FILE NAME	Assembly
0.XXXX	±.0005				Motorized XYZ-YAW	OSMS 4 axis stage

PAGE 1 of 1

Assembly