Z Axis Steel Extended Contact Translation Stages (Vertical)

Stage Size 25 × 25mm / 40 × 40 mm / 60 × 60 mm / 65 × 65 mm

TSD-L RoHS

Z axis translation stages with integrated stage and angle bracket.

● Hardened Steel linear translation stages with integrated bearing ways for superior stiffness, accuracy and durability

Specifications

Part Number	METRIC	**TSD-253L**	**TSD-403L**	**TSD-603L**	**TSD-653L-M6**
	INCH	**—**	**TSD-403LUU**	**—**	**TSD-653LUU**
(Opposite Model)	METRIC	**TSD-253RL**	**TSD-403RL**	**TSD-603RL**	**TSD-653RL-M6**
	INCH	**—**	**TSD-403RLUU**	**—**	**TSD-653RLUU**
Stage Size [mm]		25×25	40×40	60×60	65×65
Axes of Travel		Z axis			
Travel [mm]		±3	±6.5	±6.5	±6.5
Lead of Actuator [mm/rotation]		0.5	0.5	0.5	0.5
Micrometer Readable Resolution [mm]		0.01	0.01	0.01	0.01
Guide Method		Extended contact ball bearing guide			
Primary Material		Steel			
Finish		Super black chrome			
Load Capacity [N]		14.7 (1.5kgf)	49 (5.0kgf)	49 (5.0kgf)	49 (5.0kgf)
Travel Accuracy	Straightness [μm]	1	1	1	1
	Pitch [″]	30	25	25	25
	Yaw [″]	25	15	15	15
Max. Moment Capacity	Pitch [N·m]	2.2	5.0	10.0	10.0
	Roll [N·m]	3.5	5.0	9.0	9.0
	Yaw [N·m]	2.0	5.0	10.0	10.0
Moment Stiffness	Pitch [″/N·cm]	1.8	0.3	0.08	0.08
	Roll [″/N·cm]	1.1	0.2	0.05	0.05
	Yaw [″/N·cm]	1.1	0.23	0.08	0.08
Running Parallelism [μm]		15	20	20	20
Squareness [μm]		30	30	30	30
Options		FP*1	FP*2/DM/WP	FP*2/DM/WP	FP*2/DM/WP
Weight [kg]		0.1	0.3	0.8	1.0

Option

Option Code	Compatible product		Lead of Actuator [mm/rotation]	Micrometer Readable Resolution [mm]	Reference
	Products Name	Part Number			
FP	Fine-pitch Screw Adjusters	**FPSA-42525***1 **FPSA-62540***2	0.25	—	E008
DM	Differential Micrometer Heads	**MHF2-13F**	Coars: 0.5 Fine: 0.025	Coars: 0.01 Fine: 0.0005	
WP	Sub-micron Worm Drive Micrometer Heads	**WGP-13**	Coars: 0.25 Fine: 0.025	Coars: 0.005 Fine: 0.0005	

* Please add an option code as the part number suffix to specify various optional specifications.

2D CAD 3D CAD

Outline Drawing

TSD-253L

Hexagonal socket head cap screw M2×6…4 screws

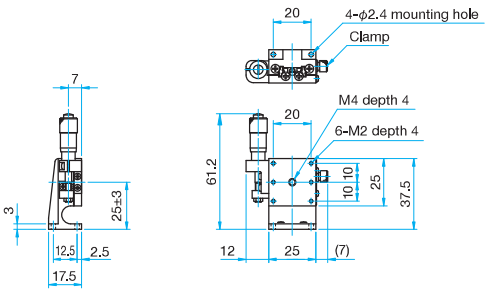

TSD-253RL

Hexagonal socket head cap screw M2×6…4 screws

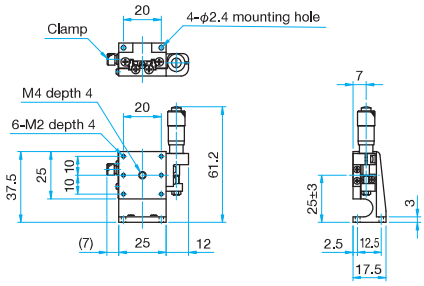

TSD-403L/403LUU

Hexagonal socket head cap screw M3×6…4 screws
Hexagonal socket head cap screw 6-32UNC×1/4…4 screws (UU)

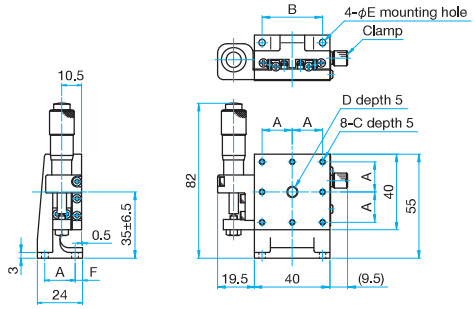

Part Number	A (mm)	B (mm)	C	D	E (mm)	F (mm)
TSD-403L	16	32	M3	M6 P1	3.5	4
TSD-403LUU	15.875	31.75	6-32UNC	1/4-20UNC	4	3.625

TSD-403RL/403RLUU

Hexagonal socket head cap screw M3×6…4 screws
Hexagonal socket head cap screw 6-32UNC×1/4…4 screws (UU)

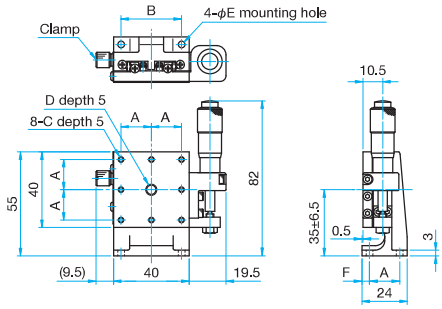

Part Number	A (mm)	B (mm)	C	D	E (mm)	F (mm)
TSD-403RL	16	32	M3	M6 P1	3.5	4
TSD-403RLUU	15.875	31.75	6-32UNC	1/4-20UNC	4	3.625

TSD-603L

Hexagonal socket head cap screw M4×8…4 screws

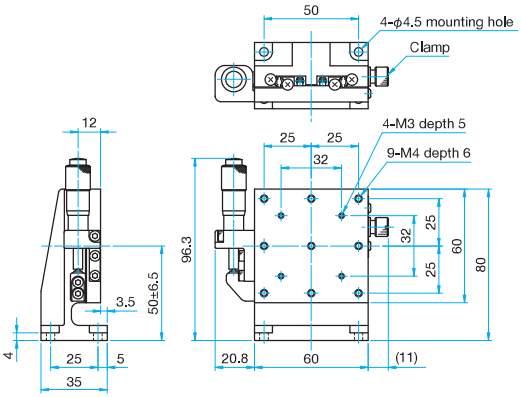

TSD-603RL

Hexagonal socket head cap screw M4×8…4 screws

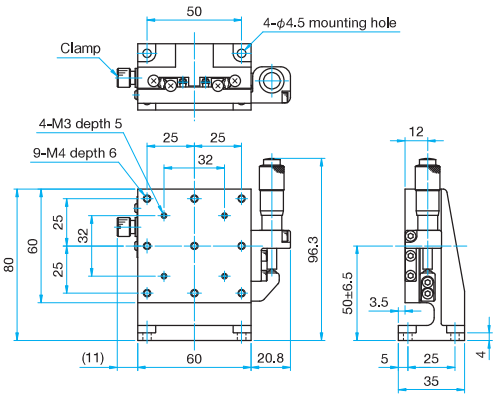

TSD-653L-M6/653LUU

Hexagonal socket head cap screw M6×6…4 screws (M6)
Hexagonal socket head cap screw 1/4-20UNC×1/4…4 screws (UU)

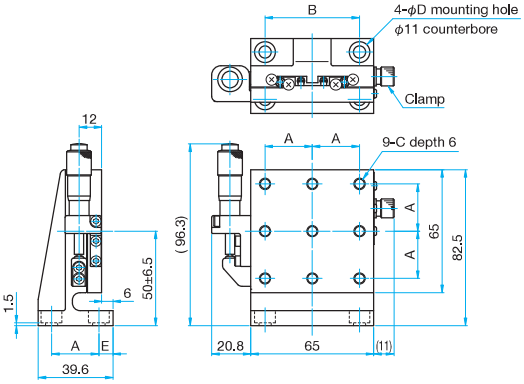

Part Number	A (mm)	B (mm)	C	D (mm)	E (mm)
TSD-653L-M6	25	50	M6 P1	6.5	7.5
TSD-653LUU	25.4	50.8	1/4-20UNC	7	7.1

TSD-653RL-M6/653RLUU

Hexagonal socket head cap screw M6×6…4 screws (M6)
Hexagonal socket head cap screw 1/4-20UNC×1/4…4 screws (UU)

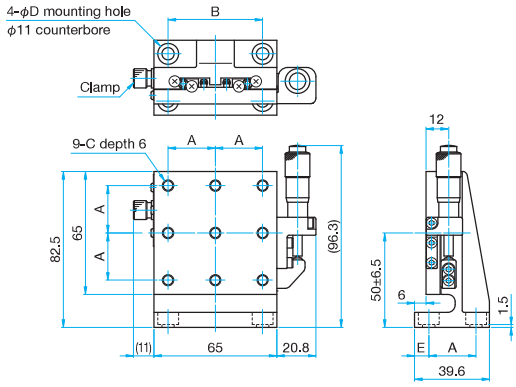

Part Number	A (mm)	B (mm)	C	D (mm)	E (mm)
TSD-653RL-M6	25	50	M6 P1	6.5	7.5
TSD-653RLUU	25.4	50.8	1/4-20UNC	7	7.1

Z Axis General-Purpose Stainless Steel Translation Stages (Vertical Mounting)
Stage Size 25 × 25 mm / 40 × 40 mm / 60 × 60 mm

TSDH-SZ RoHS Catalog Code W7153

High precision crossed-roller linear translation stages with black anodized aluminum bodies.

- Stage body consists of stainless steel (440C). To prevent rusting, the finish has been processed with electroless nickel plating.

Guide

- Also available with a super black chrome surface finish. Please contact sales for more information.

Attention

- Micrometer brackets may extend above the top surface of some stages. Check drawings for more information.
- Note that some samples might not be able to be fixed on the stage depending on their shapes, or required travel might not be ensured.

2D CAD 3D CAD

Outline Drawing

TSDH-251SZ
Hexagonal socket head cap screw (stainless steel construction) M2×4…4 screws

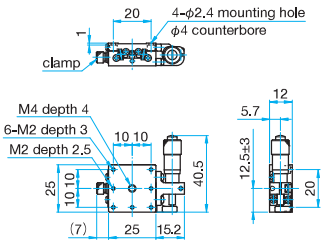

TSDH-401SZ
Hexagonal socket head cap screw (stainless steel construction) M3×6…4 screws, Spring washers

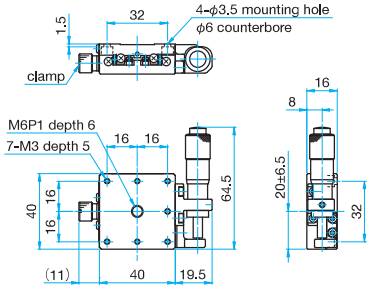

TSDH-601SZ
Hexagonal socket head cap screw (stainless steel construction) M4×6…4 screws

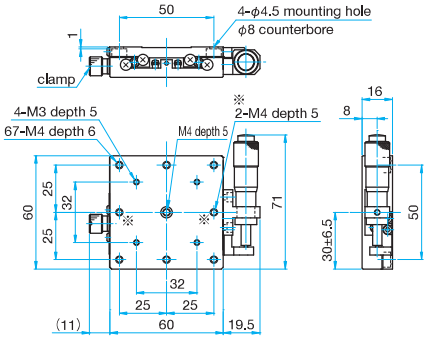

Specifications

Part Number	METRIC	TSDH-251SZ	TSDH-401SZ	TSDH-601SZ
Stage Size [mm]		25×25	40×40	60×60
Axes of Travel		Z axis		
Micrometer Position		Side		
Travel [mm]		±3	±6.5	±6.5
Lead of Actuator [mm/rotation]		0.5	0.5	0.5
Micrometer Readable Resolution [mm]		0.01	0.01	0.01
Guide Method		Extended contact ball bearing guide		
Primary Material		SUS440C quench hardened		
Finish		Electroless nickel		
Load Capacity [N]		14.7N (1.5kgf)	24.5N (2.5kgf)	29.4N (3.0kgf)
Travel Accuracy	Straightness [μm]	1	1	1
Max. Moment Capacity	Pitch [N·m]	1.7	4	6.4
	Roll [N·m]	1.8	4	6.4
Moment Stiffness	Pitch [″/N·cm]	1.9	0.4	0.25
Running Parallelism [μm]		20	20	20
Options		FP*1	FP*2	FP*2
Weight [kg]		0.07	0.2	0.45

Option

Option Code	Compatible product		Lead of Actuator [mm/rotation]	Micrometer Readable Resolution [mm]	Reference
	Products Name	Part Number			
FP	Fine-pitch Screw Adjusters	FPSA-42525*1 FPSA-62540*2	0.25	–	E008

* Please add an option code as the part number suffix to specify various optional specifications.

Z Axis General-Purpose Stainless Steel Translation Stages

Stage Size 25 × 25 mm / 40 × 40 mm / 60 × 60 mm

TSDH-L RoHS Catalog Code W7131

High precision crossed-roller linear translation stages with black anodized aluminum bodies.

- Stage body consists of stainless steel (440C). To prevent rusting, the finish has been processed with electroless nickel plating.

Guide

- Also available with a super black chrome surface finish. Please contact sales for more information.

Attention

- Micrometer brackets may extend above the top surface of some stages. Check drawings for more information.
- Note that some samples might not be able to be fixed on the stage depending on their shapes, or required travel might not be ensured.

2D CAD 3D CAD

Outline Drawing

TSDH-253L

Hexagon socket head cap screw (stainless steel construction) M2×8…2 screws

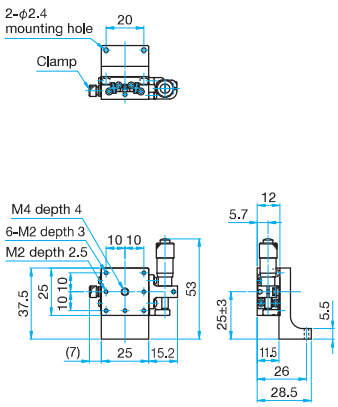

TSDH-403L

Hexagon socket head cap screw (stainless steel construction) M3×8…2 screws

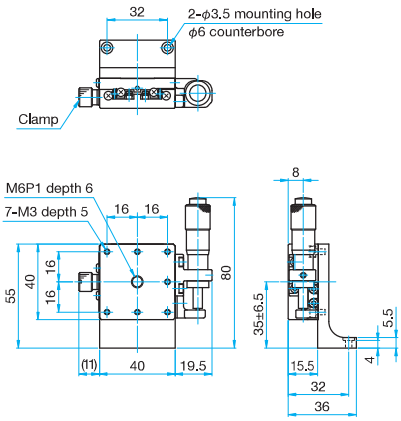

TSDH-603L

Hexagon socket head cap screw (stainless steel construction) M3×8…2 screws, M4×12…2 screws

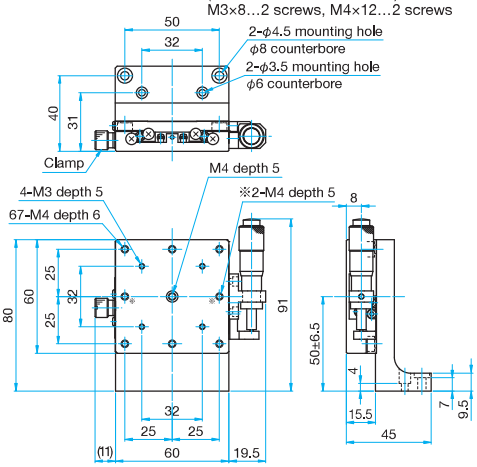

Specifications

Part Number	METRIC	TSDH-253L	TSDH-403L	TSDH-603L
Stage Size [mm]		25×25	40×40	60×60
Axes of Travel		Z axis		
Travel [mm]		±3	±6.5	±6.5
Lead of Actuator [mm/rotation]		0.5	0.5	0.5
Micrometer Readable Resolution [mm]		0.01	0.01	0.01
Guide Method		Extended contact ball bearing guide		
Primary Material		SUS440C quench hardened		
Finish		Electroless nickel		
Load Capacity [N]		9.8 (1.0kgf)	19.6 (2.0kgf)	49 (5.0kgf)
Travel Accuracy	Straightness [μm]	1	1	1
	Pitch [″]	30	30	25
	Yaw [″]	25	25	15
Max. Moment Capacity	Pitch [N·m]	0.7	1.0	1.0
	Roll [N·m]	0.5	1.0	1.0
	Yaw [N·m]	0.4	1.0	1.0
Moment Stiffness	Pitch [″/N·cm]	4.7	0.9	0.6
	Roll [″/N·cm]	3.2	0.8	0.6
	Yaw [″/N·cm]	3.0	0.6	0.4
Running Parallelism [μm]		20	20	20
Squareness [μm]		30	30	30
Options		FP*1	FP*2	FP*2
Weight [kg]		0.1	0.25	0.65

Option

Option Code	Compatible product: Products Name	Compatible product: Part Number	Lead of Actuator [mm/rotation]	Micrometer Readable Resolution [mm]	Reference
FP	Fine-pitch Screw Adjusters	FPSA-42525*1 FPSA-62540*2	0.25	–	E008

* Please add an option code as the part number suffix to specify various optional specifications.

Z Axis Steel Extended Contact Translation Stages (Vertical Mounting)

Stage Size 25 × 25 mm / 40 × 40 mm / 60 × 60 mm / 65 × 65 mm

TSD-SZ RoHS

Z axis stages designed for mounting on a vertical surface for the load to bear on the micrometer head vs. pulling against the spring.

● Hardened Steel linear translation stages with integrated bearing ways for superior stiffness, accuracy and durability.

Guide

▶ Rectangular footprints are also available.
Reference E100 Catalog Code W7132

Specifications

Part Number	METRIC	TSD-251SZ	TSD-401SZ	TSD-601SZ	TSD-651SZ25-M6
	INCH	—	TSD-401SZUU	—	TSD-651SZ25UU
(Opposite Model)	METRIC	TSD-251SRZ	TSD-401SRZ	TSD-601SRZ	—
	INCH	—	TSD-401SRZUU	—	—
Stage Size [mm]		25×25	40×40	60×60	65×65
Axes of Travel		Z axis			
Travel [mm]		±3	±6.5	±6.5	±12.5
Lead of Actuator [mm/rotation]		0.5	0.5	0.5	0.5
Micrometer Readable Resolution [mm]		0.01	0.01	0.01	0.01
Guide Method		Extended contact ball bearing guide			
Primary Material		Steel			
Finish		Super black chrome			
Load Capacity [N]		14.7 (1.5kgf)	49 (5.0kgf)	49 (5.0kgf)	49 (5.0kgf)
Travel Accuracy	Straightness [μm]	1	1	1	1
Max. Moment Capacity	Pitch [N·m]	2.2	5.0	8.0	8.0
	Roll [N·m]	2.1	5.0	8.0	8.0
Moment Stiffness	Pitch [″/N·cm]	1.63	0.31	0.2	0.2
Running Parallelism [μm]		10	10	10	10
Options		FP*1	FP*2	FP*2	FP*3
Weight [kg]		0.07	0.2	0.5	0.6

Option

Option Code	Compatible product		Lead of Actuator [mm/rotation]	Micrometer Readable Resolution [mm]	Reference
	Products Name	Part Number			
FP	Fine-pitch Screw Adjusters	FPSA-42525*1 FPSA-62540*2 FPSA-62550*3	0.25	—	E008

* Please add an option code as the part number suffix to specify various optional specifications.

Application Systems
Optics & Optical Coatings
Opto-Mechanics
Bases
Manual Stages
Actuators & Adjusters
Motoeized Stages
Light Sources & Laser Safety
Index
Guide
X Axis Stages
XY Axis Stages
Z Axis Stages
XZ Axis Stages
XYZ Axis Stages
Rotation Stages
Goniometer
Tilt Stages
Vacuum
Ball Bearing Guide
Crossed Roller
Dovetail
Lapping
V Groove Screw
Ohters
15 × 15 mm
25 × 25 mm
40 × 40 mm
60 × 60 mm
65 × 65 mm
80 × 80 mm
100 × 100 mm
120 × 120 mm
Others

2D CAD 3D CAD

Outline Drawing

TSD-251SZ

Hexagonal socket head cap screw M2×4…4 screws

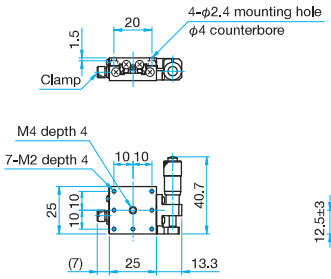

TSD-251SRZ

Hexagonal socket head cap screw M2×4…4 screws

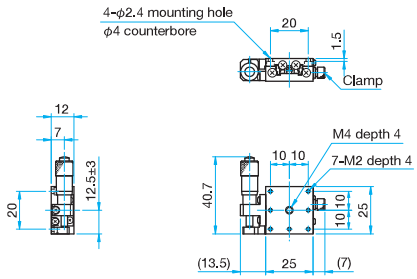

TSD-401SZ/401SZUU

Hexagonal socket head cap screw M3×6…4 screws
Hexagonal socket head cap screw 6-32UNC×1/4…4 screws (UU)

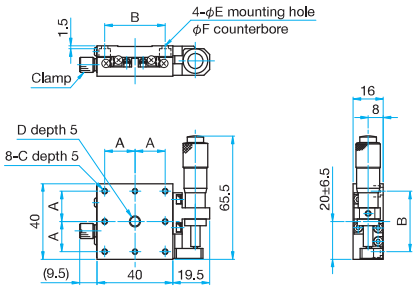

Part Number	A (mm)	B (mm)	C	D	E (mm)	F (mm)
TSD-401SZ	16	32	M3	M6 P1	3.5	6
TSD-401SZUU	15.875	31.75	6-32UNC	1/4-20UNC	4	6.5

TSD-401SRZ/401SRZUU

Hexagonal socket head cap screw M3×6…4 screws
Hexagonal socket head cap screw 6-32UNC×1/4…4 screws (UU)

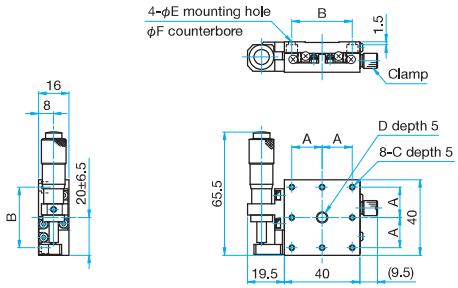

Part Number	A (mm)	B (mm)	C	D	E (mm)	F (mm)
TSD-401SRZ	16	32	M3	M6 P1	3.5	6
TSD-401SRZUU	15.875	31.75	6-32UNC	1/4-20UNC	4	6.5

TSD-601SZ

Hexagonal socket head cap screw M4×6…4 screws

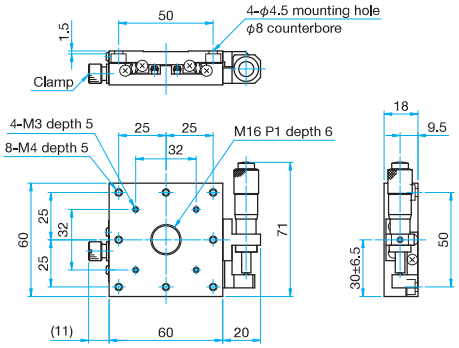

TSD-601SRZ

Hexagonal socket head cap screw M4×6…4 screws

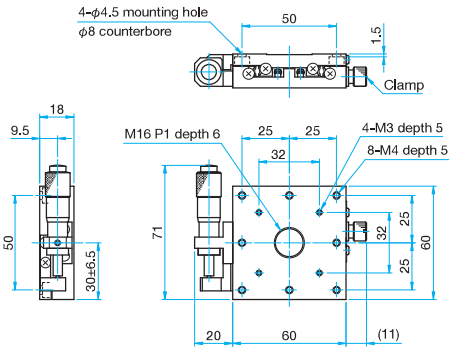

TSD-651SZ25-M6/651SZ25UU

Hexagonal socket head cap screw M6×6…4 screws (M6)
Hexagonal socket head cap screw 1/4-20UNC×1/4…4 screws (UU)

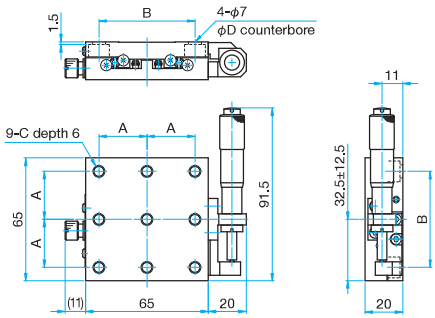

Part Number	A (mm)	B (mm)	C	D (mm)
TSD-651SZ25-M6	25	50	M6 P1	11
TSD-651SZ25UU	25.4	50.8	1/4-20UNC	12

Z Axis Steel Extended Contact Translation Stages (Vertical Mounting) | TSD-LONG-SZ RoHS

Z axis stages designed for mounting on a vertical surface for the load to bear on the micrometer head vs. pulling against the spring.
The rectangular shape minimizes the footprint while providing longer travel.

- Hardened steel linear translation stages with integrated bearing ways and a black chrome finish. Our "Extended Contact" technology yields superior stability, stiffness, accuracy, and durability.

Specifications

Part Number	METRIC	TSD-25501SZ	TSD-40801SZ	TSD-60121SZ	TSD-65121SZ-M6
	INCH	—	TSD-40801SZUU	—	TSD-65121SZUU
Stage Size [mm]		25×50	40×80	60×120	65×120
Axes of Travel		Z axis			
Travel [mm]		±6.5	±12.5	±20	±20
Lead of Actuator [mm/rotation]		0.5	0.5	0.5	0.5
Micrometer Readable Resolution [mm]		0.01	0.01	0.01	0.01
Guide Method		Extended contact ball bearing guide			
Primary Material		Steel			
Finish		Super black chrome			
Load Capacity [N]		9.8 (1.0kgf)	19.6 (2.0kgf)	29.4 (3.0kgf)	29.4 (3.0kgf)
Travel Accuracy	Straightness [μm]	2	2	2	3
Max. Moment Capacity	Pitch [N·m]	2.0	2.6	3	3
	Roll [N·m]	1.4	2.6	3	3
Moment Stiffness	Pitch [″/N·cm]	1.12	0.15	0.1	0.1
Running Parallelism [μm]		10	10	10	10
Weight [kg]		0.1	0.4	1.0	1.2

2D CAD 3D CAD

Outline Drawing

TSD-25501SZ

Hexagonal socket head cap screw M2×4…4 screws

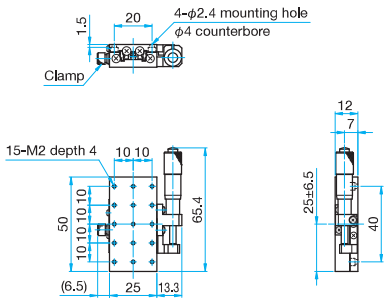

TSD-40801SZ/40801SZUU

Hexagonal socket head cap screw M3×6…4 screws
Hexagonal socket head cap screw 6-32UNC×3/16…4 screws (UU)

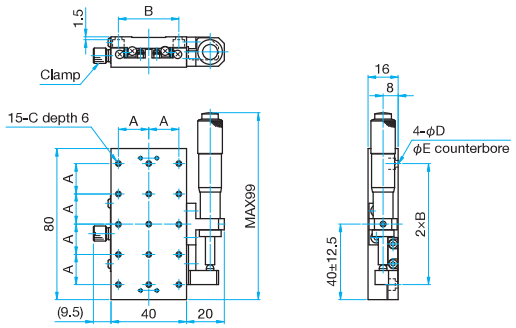

Part Number	A (mm)	B (mm)	C	D (mm)	E (mm)
TSD-40801SZ	16	32	M3	3.5	6
TSD-40801SZUU	15.875	31.75	6-32UNC	4	6.5

TSD-60121SZ

Hexagonal socket head cap screw M4×8…4 screws

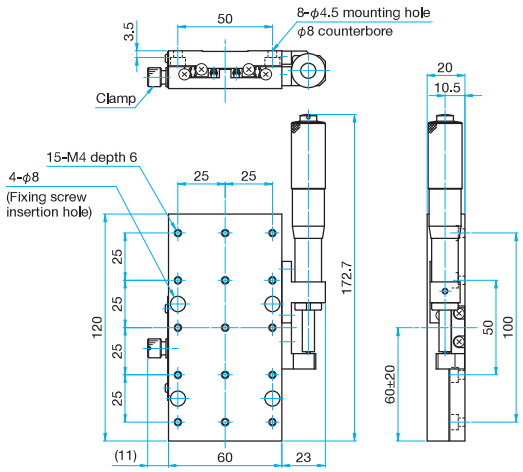

TSD-65121SZ-M6/65121SZUU

Hexagonal socket head cap screw M6×6…4 screws (M6)
Hexagonal socket head cap screw 1/4-20UNC×1/4…4 screws (UU)

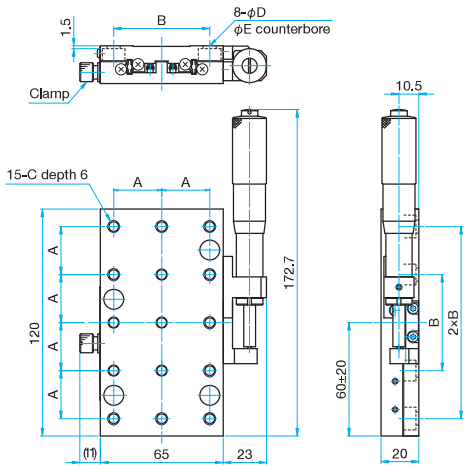

Part Number	A (mm)	B (mm)	C	D (mm)	E (mm)
TSD-65121SZ-M6	25	50	M6 P1	6.5	11
TSD-65121SZUU	25.4	50.8	1/4-20UNC	7	12

Z Axis Aluminum Crossed Roller Translation Stages (Vertical)

Stage Size 40 × 40 mm / 60 × 60 mm / 65 × 65 mm / 80 × 80 mm

TAM-3L RoHS

Light-weight Z axis aluminum stages with integrated angle bracket.
Crossed roller guide enable smooth travel.

Specifications

Part Number	METRIC	TAM-403L	TAM-603L	TAM-653L-M6	TAM-803L
	INCH	TAM-403LUU	–	TAM-653LUU	–
(Opposite Model)	METRIC	TAM-403RL	–	TAM-653RL-M6	–
	INCH	TAM-403RLUU	–	TAM-653RLUU	–
Stage Size [mm]		40×40	60×60	65×65	80×80
Axes of Travel		Z axis			
Travel [mm]		±6.5	±6.5	±6.5	±7.5
Lead of Actuator [mm/rotation]		0.5	0.5	0.5	0.5
Micrometer Readable Resolution [mm]		0.01	0.01	0.01	0.01
Guide Method		Crossed roller			
Primary Material		Aluminum			
Finish		Black anodized			
Load Capacity [N]		49 (5.0kgf)	49 (5.0kgf)	49 (5.0kgf)	49 (5.0kgf)
Travel Accuracy	Straightness [μm]	2	2	2	2
Max. Moment Capacity	Pitch [N·m]	3.0	5.0	5.0	7.0
	Roll [N·m]	3.0	5.0	5.0	7.0
Moment Stiffness	Pitch [″/N·cm]	0.66	0.3	0.3	0.12
Running Parallelism [μm]		20	20	20	20
Squareness [μm]		30	30	30	30
Options		FP*1/DM/WP	FP*1/DM/WP	FP*1/DM/WP	FP*2
Weight [kg]		0.15	0.3	0.4	0.6

Option

Option Code	Compatible product		Lead of Actuator [mm/rotation]	Micrometer Readable Resolution [mm]	Reference
	Products Name	Part Number			
FP	Fine-pitch Screw Adjusters	FPSA-62540*1 FPSA-62550*2	0.25	–	E008
DM	Differential Micrometer Heads	MHF2-13F	Coars: 0.5 Fine: 0.025	Coars: 0.01 Fine: 0.0005	
WP	Sub-micron Worm Drive Micrometer Heads	WGP-13	Coars: 0.25 Fine: 0.005	Coars: 0.005 Fine: 0.0005	

* Please add an option code as the part number suffix to specify various optional specifications.

2D CAD 3D CAD

Outline Drawing

TAM-403L/403LUU

Hexagonal socket head cap screw M3×10…2 screws
Hexagonal socket head cap screw 6-32UNC×3/8…2 screws (UU)

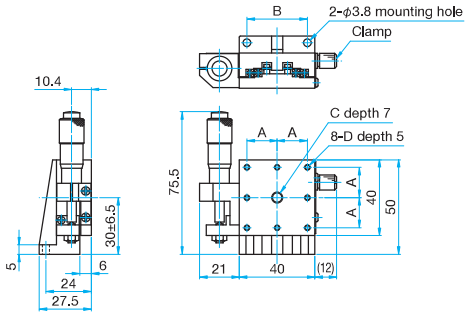

Part Number	A (mm)	B (mm)	C	D
TAM-403L	16	32	M6 P1	M3
TAM-403LUU	15.875	31.75	1/4-20UNC	6-32UNC

TAM-403RL/403RLUU

Hexagonal socket head cap screw M3×10…2 screws
Hexagonal socket head cap screw 6-32UNC×3/8…2 screws (UU)

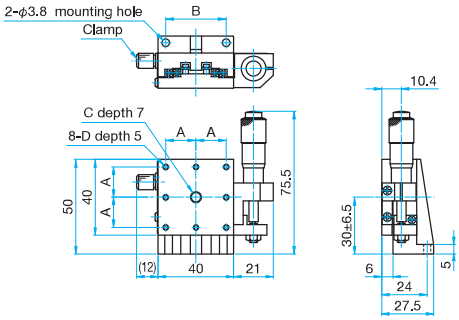

Part Number	A (mm)	B (mm)	C	D
TAM-403RL	16	32	M6 P1	M3
TAM-403RLUU	15.875	31.75	1/4-20UNC	6-32UNC

TAM-603L

Hexagonal socket head cap screw M4×12…4 screws

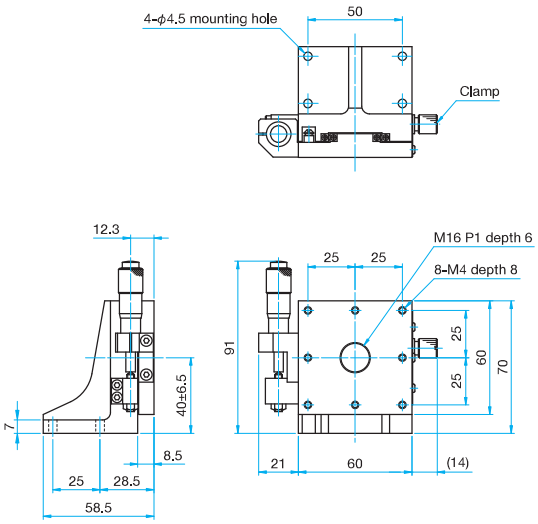

TAM-803L

Hexagonal socket head cap screw M4×12…4 screws

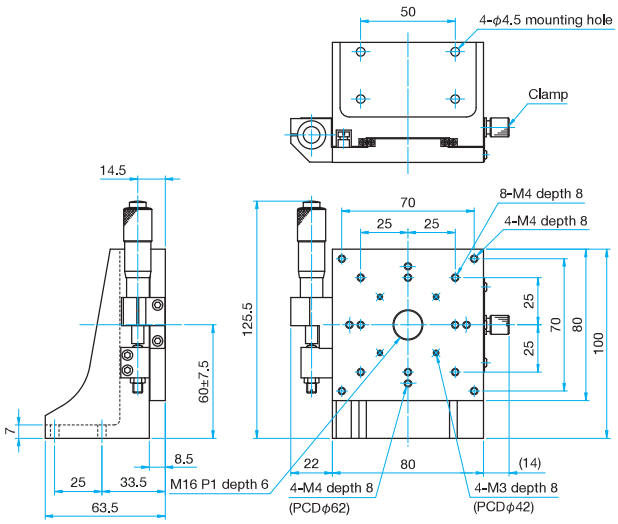

TAM-653L-M6/653LUU

Hexagonal socket head cap screw M6×15…4 screws (M6)
Hexagonal socket head cap screw 1/4-20UNC×5/8…4 screws (UU)

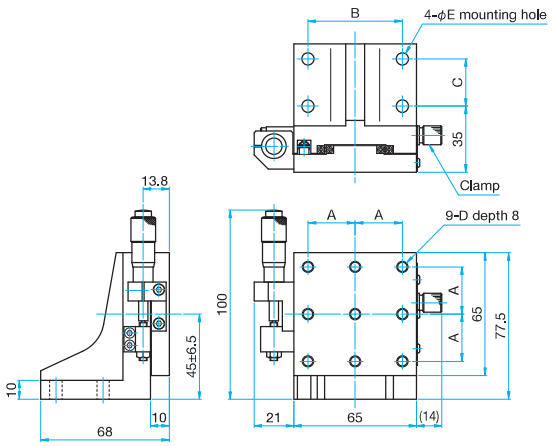

Part Number	A (mm)	B (mm)	C (mm)	D	E (mm)
TAM-653L-M6	25	50	25	M6 P1	6.5
TAM-653LUU	25.4	50.8	25.4	1/4-20UNC	7

TAM-653RL-M6/653RLUU

Hexagonal socket head cap screw M6×15…4 screws (M6)
Hexagonal socket head cap screw 1/4-20UNC×5/8…4 screws (UU)

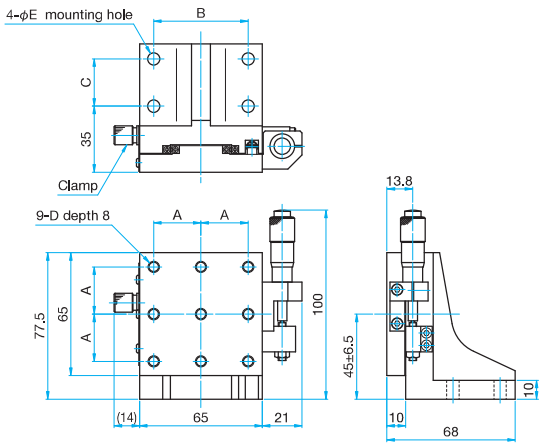

Part Number	A (mm)	B (mm)	C (mm)	D	E (mm)
TAM-653RL-M6	25	50	25	M6 P1	6.5
TAM-653RLUU	25.4	50.8	25.4	1/4-20UNC	7

Z Axis Aluminium Translation Stages (Vertical Mounting)

Stage Size 25 × 25 mm / 40 × 40 mm / 60 × 60 mm / 65 × 65 mm

TADC-SZ RoHS

Aluminum translation stage with high stiffness bearing ways. Cost effective and light weight.

- High quality translation stage with smooth travel. Optimal for positioning and alignment.
- Unique steel bearing ways with 4-point extended contact yield stable load capacity in all directions.
- Long life, maintenance free.

Attention

▶ Micrometer brackets may extend above the top surface of some stages. Check drawings for more information.

2D CAD 3D CAD

Outline Drawing

TADC-251SZ

Hexagon socket head cap screw (stainless steel construction) M2×4...4 screws

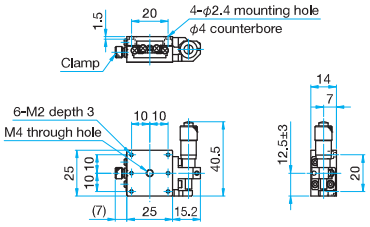

TADC-251SRZ

Hexagon socket head cap screw (stainless steel construction) M2×4...4 screws

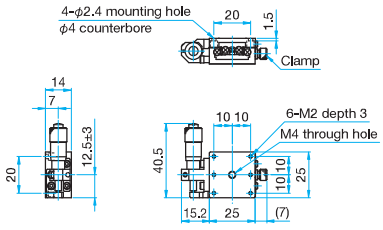

Specifications

Part Number	METRIC	TADC-251SZ	TADC-401SZ	TADC-601SZ	TADC-651SZ25-M6
	INCH	–	–	–	TADC-651SZ25UU
(Opposite Model)	METRIC	TADC-251SRZ	TADC401SRZ	TADC601SRZ	TADC-651SRZ25-M6
	INCH	–	–	–	TADC-651SRZ25UU
Stage Size [mm]		25×25	40×40	60×60	65×65
Axes of Travel		Z axis			
Micrometer Position		Side			
Travel [mm]		±3	±6.5	±6.5	±12.5
Lead of Actuator [mm/rotation]		0.5	0.5	0.5	0.5
Micrometer Readable Resolution [mm]		0.01	0.01	0.01	0.01
Guide Method		Extended contact ball bearing guide			
Primary Material		Aluminum			
Finish		Black anodized			
Load Capacity [N]		14.7N (1.5kgf)	24.5N (2.5kgf)	29.4N (3.0kgf)	39.2N (4.0kgf)
Travel Accuracy	Straightness [μm]	3	3	3	3
Max. Moment Capacity	Pitch [N·m]	1.47	2.5	4.9	4.9
	Roll [N·m]	1.47	2.5	4.9	4.9
Moment Stiffness	Pitch [″/N·cm]	6	0.66	0.4	0.4
Running Parallelism [μm]		20	10	10	10
Weight [kg]		0.05	0.15	0.2	0.31

2D CAD 3D CAD

Outline Drawing

TADC-401SZ

Hexagonal socket head cap screw M3×6…4 screws
SUS spring washers

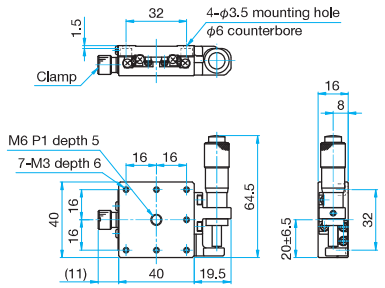

TADC-401SRZ

Hexagonal socket head cap screw M3×6…4 screws
SUS spring washers

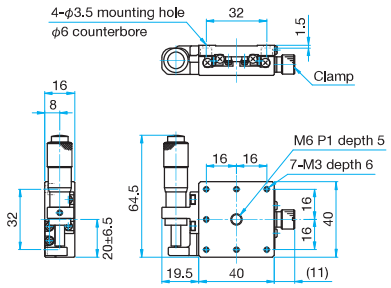

TADC-601SZ

Hexagon socket head cap screw (stainless steel construction) M4×6…4 screws

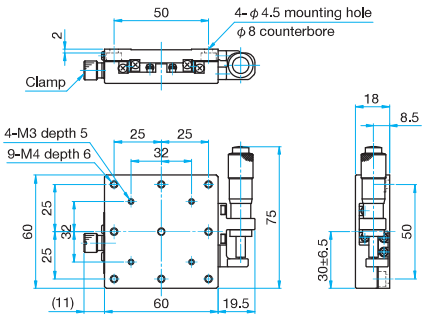

TADC-601SRZ

Hexagon socket head cap screw (stainless steel construction) M4×6…4 screws

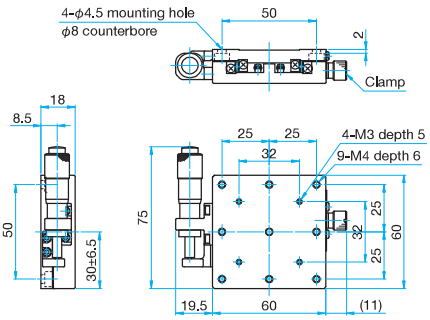

TADC-651SZ25-M6/651SZ25UU

Hexagon socket head cap screw (stainless steel construction) M6×8…4 screws(M6)
Hexagon socket head cap screw (stainless steel construction) 1/4-20UNC×5/16…4 screws (UU)

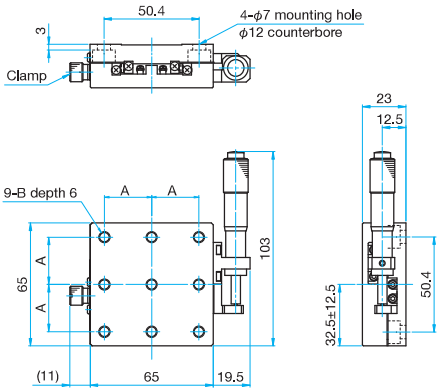

Part Number	A (mm)	B
TADC-651SZ25-M6	25	M6
TADC-651SZ25UU	25.4	1/4-20UNC

TADC-651SRZ25-M6/651SRZ25UU

Hexagon socket head cap screw (stainless steel construction) M6×8…4 screws(M6)
Hexagon socket head cap screw (stainless steel construction) 1/4-20UNC×5/16…4 screws (UU)

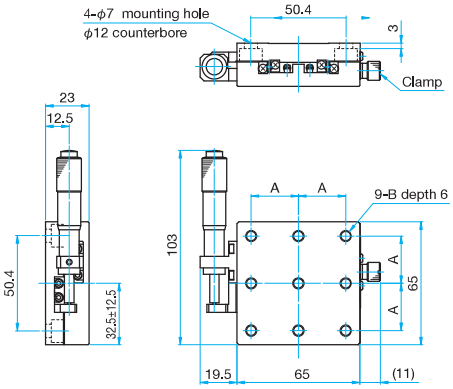

Part Number	A (mm)	B
TADC-651SRZ25-M6	25	M6
TADC-651SRZ25UU	25.4	1/4-20UNC

Z Axis Aluminium Translation Stages (Vertical)

Stage Size 25 × 25 mm / 40 × 40 mm / 60 × 60 mm / 65 × 65 mm

TADC-L

RoHS

Aluminum translation stage with high stiffness bearing ways. Cost effective and light weight.

- High quality translation stage with smooth travel. Optimal for positioning and alignment.
- Unique steel bearing ways with 4-point extended contact yield stable load capacity in all directions.
- Long life, maintenance free.
- Special L brackets are attached to the TADC-SZ series.

Guide

▶Vertical mounting type stages without a L angle bracket are also available. Reference E104 Catalog Code W7514

Attention

▶Micrometer brackets may extend above the top surface of some stages. Check drawings for more information.
▶Note that some samples might not be able to be fixed on the stage depending on their shapes, or required travel might not be ensured.

2D CAD 3D CAD

Outline Drawing

TADC-253L

Hexagon socket head cap screw (stainless steel construction) M2×8...2 screw

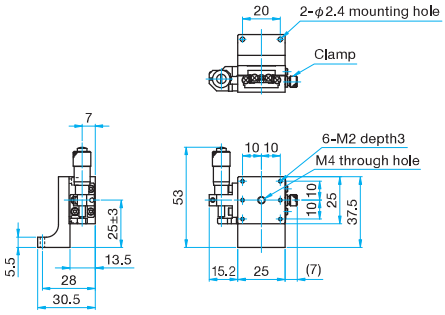

TADC-253RL

Hexagon socket head cap screw (stainless steel construction) M2×8...2 screw

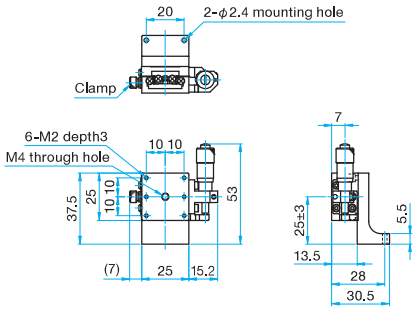

Specifications

Part Number	METRIC	TADC-253L	TADC-403L	TADC-603L	TADC-653L25-M6
	INCH	—	TADC-403LUU	—	TADC-653L25UU
(Opposite Model)	METRIC	TADC-253RL	TADC-403RL	TADC-603RL	TADC-653RL25-M6
	INCH	—	TADC-403RLUU	—	TADC-653RL25UU
Stage Size [mm]		25×25	40×40	60×60	65×65
Axes of Travel		Z axis			
Micrometer Position		Side			
Travel [mm]		±3	±6.5	±6.5	±12.5
Lead of Actuator [mm/rotation]		0.5	0.5	0.5	0.5
Micrometer Readable Resolution [mm]		0.01	0.01	0.01	0.01
Guide Method		Extended contact ball bearing guide			
Primary Material		Aluminum			
Finish		Black anodized			
Load Capacity [N]		14.7N (1.5kgf)	24.5N (2.5kgf)	29.4N (3kgf)	39.2N (4.0kgf)
Travel Accuracy	Straightness [μm]	3	3	3	3
Max. Moment Capacity	Pitch [N·m]	1.47	2.5	4.9	4.9
	Roll [N·m]	1.47	2.5	4.9	4.9
Moment Stiffness	Pitch [″/N·cm]	16.0	0.66	0.3	0.5
Running Parallelism [μm]		20	10	10	20
Weight [kg]		0.07	0.2	0.36	0.51

Application Systems
Optics & Optical Coatings
Opto-Mechanics
Bases
Manual Stages
Actuators & Adjusters
Motoeized Stages
Light Sources & Laser Safety
Index
Guide
X Axis Stages
XY Axis Stages
Z Axis Stages
XZ Axis Stages
XYZ Axis Stages
Rotation Stages
Goniometer
Tilt Stages
Vacuum
Ball Bearing Guide
Crossed Roller
Dovetail
Lapping
V Groove Screw
Ohters
15 × 15 mm
25 × 25 mm
40 × 40 mm
60 × 60 mm
65 × 65 mm
80 × 80 mm
100 × 100 mm
120 × 120 mm
Others

2D CAD 3D CAD

Outline Drawing

TADC-403L/403LUU

Hexagon socket head cap screw (stainless steel construction) M3×8…2 screws
Hexagon socket head cap screw
(stainless steel construction) 6-32UNC×5/16…2 screws (UU)

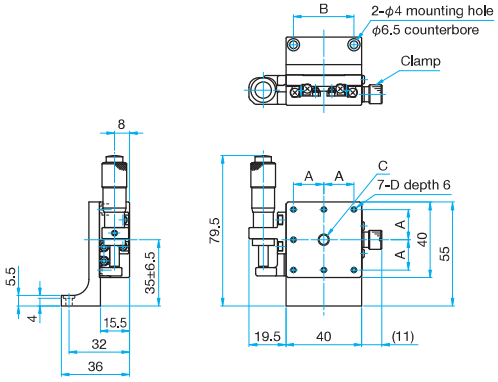

Part Number	A (mm)	B (mm)	C	D
TADC-403L	16	32	M6 P1 depth 5	M3
TADC-403LUU	15.875	31.75	1/4-20UNC depth 5	6-32UNC

TADC-403RL/403RLUU

Hexagon socket head cap screw (stainless steel construction) M3×8…2 screws
Hexagon socket head cap screw
(stainless steel construction) 6-32UNC×5/16…2 screws (UU)

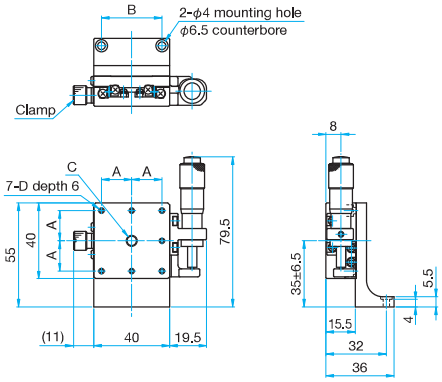

Part Number	A (mm)	B (mm)	C	D
TADC-403RL	16	32	M6 P1 depth 5	M3
TADC-403RLUU	15.875	31.75	1/4-20UNC depth 5	6-32UNC

TADC-603L

Hexagonal socket head cap screw (stainless steel construction) M3×8…2 screws

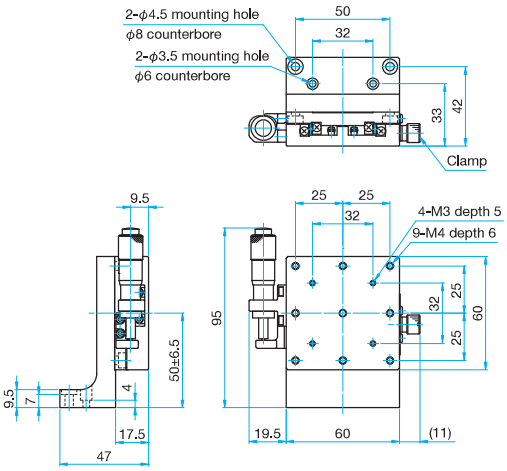

TADC-603RL

Hexagonal socket head cap screw (stainless steel construction) M3×8…2 screws

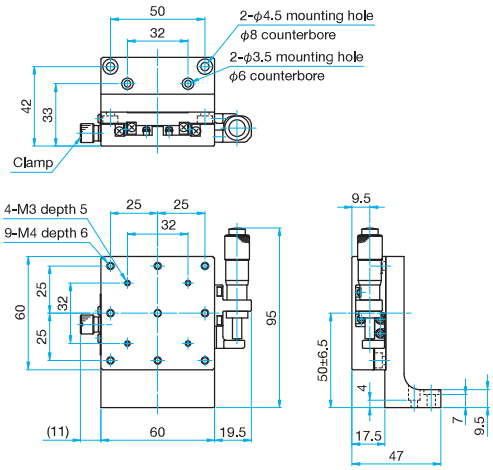

TADC-653L25-M6/653L25UU

Hexagon socket head cap screw (stainless steel construction) M6×12…2 screws (M6)
Hexagon socket head cap screw (stainless steel construction) 1/4-20UNC×1/2…2 screws (UU)

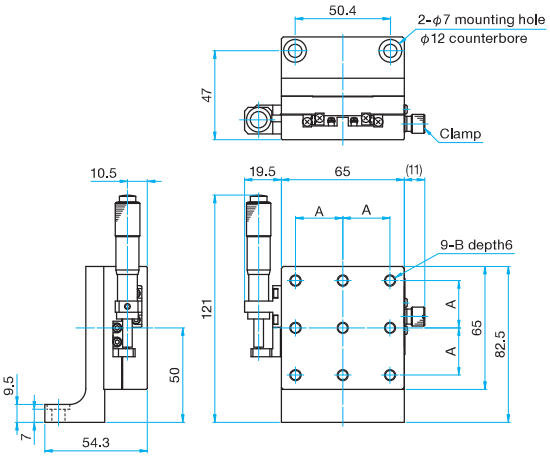

Part Number	A (mm)	B
TADC-653L25-M6	25	M6
TADC-653L25UU	25.4	1/4-20UNC

TADC-653RL25-M6/653RL25UU

Hexagon socket head cap screw (stainless steel construction) M6×12…2 screws (M6)
Hexagon socket head cap screw (stainless steel construction) 1/4-20UNC×1/2…2 screws (UU)

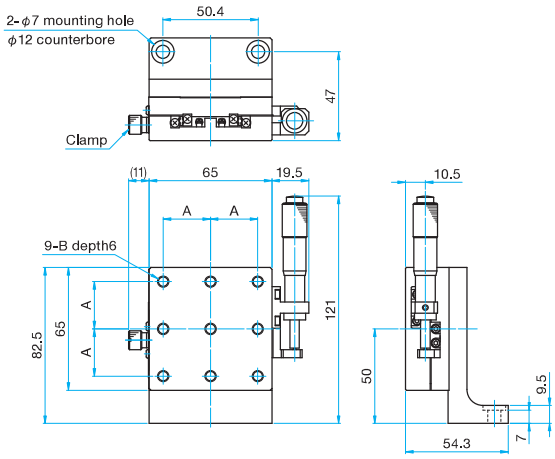

Part Number	A (mm)	B
TADC-653RL25-M6	25	M6
TADC-653RL25UU	25.4	1/4-20UNC

Z Axis Preset Dovetail Translation Stages - Footprints

Stage Size 15 × 15 mm / 25 × 25 mm / 40 × 40 mm / 60 × 60 mm / 65 × 65 mm

TASB-3 RoHS

Application Systems
Optics & Optical Coatings
Opto-Mechanics
Bases
Manual Stages
Actuators & Adjusters
Motoeized Stages
Light Sources & Laser Safety
Index
Guide
X Axis Stages
XY Axis Stages
Z Axis Stages
XZ Axis Stages
XYZ Axis Stages
Rotation Stages
Goniometer
Tilt Stages
Vacuum
Ball Bearing Guide
Crossed Roller
Dovetail
Lapping
V Groove Screw
Ohters
15 × 15 mm
25 × 25 mm
40 × 40 mm
60 × 60 mm
65 × 65 mm
80 × 80 mm
100 × 100 mm
120 × 120 mm
Others

Z axis translation stages with horizontal top plate.
Space saving design offers compact footprints.
Appropriate for system integration.

- Ideal for system integration where fine alignment is made, the stage is locked, and the system is sealed or closed.
- Multiple square footprints available.
- Minimal protrusions, including the adjustment knob, to fit within tight locations.
- Lockable with the use of a small locking set screw and wrench.

Guide

▶A hex wrench, knurled knob, and locking wrench are included.

Mounting Method

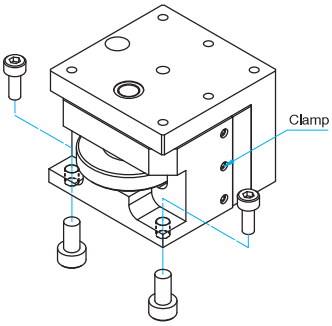

About Mounting Holes

The bottom mounting holes of preset stages are tapped holes. These stages allow mounting from the top or the bottom, convenient for securing on optical breadboards or other instruments as well as assembling in systems. Use the screws of the sizes listed in the table on the right for mounting.

Part Number	Secure from the top	Secure from the bottom
TASB-153	M2	M2.6
TASB-253	M2	M3
TASB-403	M3	M4
TASB-403UU	6-32UNC	–
TASB-603	M4	M5
TASB-653-M6	M6	M8
TASB-653UU	1/4-20UNC	5/16-18UNC

Detailed Illustration

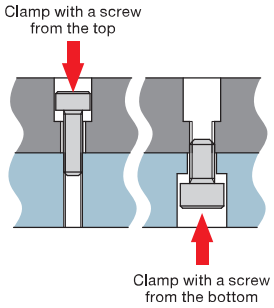

Top mounting
Tapped holes are used as counterbores because screws are smaller than tapped holes and will go in without any interference.

Bottom mounting
Clamp with screws that match the specification of tapped holes.

Specifications

Part Number	METRIC	TASB-153	TASB-253	TASB-403	TASB-603	TASB-653-M6
	INCH	–	–	TASB-403UU	–	TASB-653UU
Stage Size [mm]		15×15	25×25	40×40	60×60	65×65
Axes of Travel		Z axis				
Travel [mm]		+2 / –0	+3 / –0	+5 / –0	+7 / –0	+7 / –0
Screw Pitch [mm]		0.4	0.5	0.5	0.5	0.5
Guide Method		Dovetail slide method				
Primary Material		Brass				
Finish		Black matte				
Load Capacity [N]		4.9 (0.5kgf)	6.9 (0.7kgf)	29.4 (3kgf)	98.1 (10kgf)	98.1 (10kgf)
Travel Accuracy	Straightness [µm]	30	30	30	30	30
Max. Moment Capacity	Pitch [N·m]	–	0.3	0.5	1.0	1.0
	Roll [N·m]	–	0.3	0.5	1.0	1.0
Moment Stiffness	Pitch [″/N·cm]	–	6.1	4.59	0.7	0.7
	Roll [″/N·cm]	–	4.1	2.55	1.7	1.7
Parallelism [µm]		100	100	100	100	100
Weight [kg]		0.012	0.05	0.2	0.9	1.1

2D CAD 3D CAD

Outline Drawing

TASB-153

Hexagonal socket head cap screw M2×5…4 screws, One 0.89mm hex wrench

Adjustment hole size ϕ1.8mm, wrench size for Clamp 0.89mm

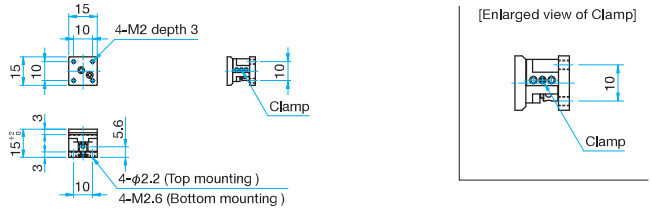

TASB-253

Hexagonal socket head cap screw M2×6…3screws, One 0.89mm hex wrench

wrench size for Clamp 0.89mm

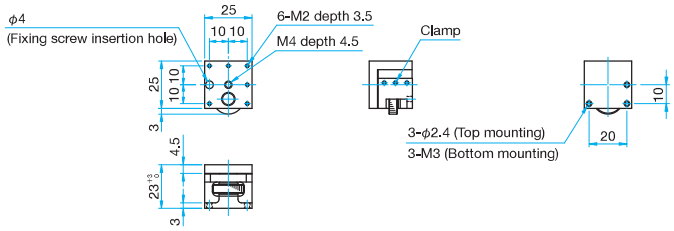

TASB-403/403UU

Hexagonal socket head cap screw M3×8…3 screws, One 1.5mm hex wrench
Hexagonal socket head cap screw
(stainless steel construction) 6-32UNC×5/16…3 screws, One 1.5mm hex wrench (UU)

wrench size for Clamp 1.5mm
hex wrench size for Clamp 1.5mm (UU)

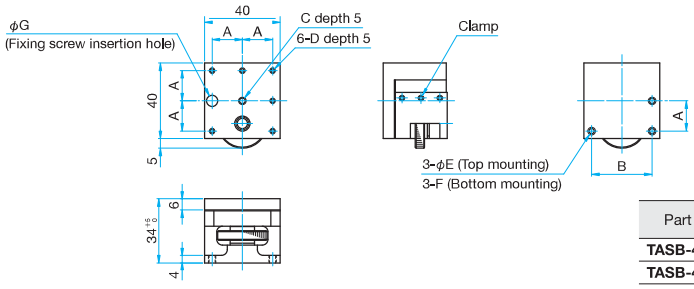

Part Number	A (mm)	B (mm)	C	D	E (mm)	F	G (mm)
TASB-403	16	32	M4	M3	3.3	4-M4	6
TASB-403UU	15.875	31.75	8-32UNC	6-32UNC	4		6.5

TASB-603

Hexagonal socket head cap screw M4×10…3 screws, One 1.5mm hex wrench

Adjustment hole size ϕ3mm, wrench size for Clamp 1.5mm

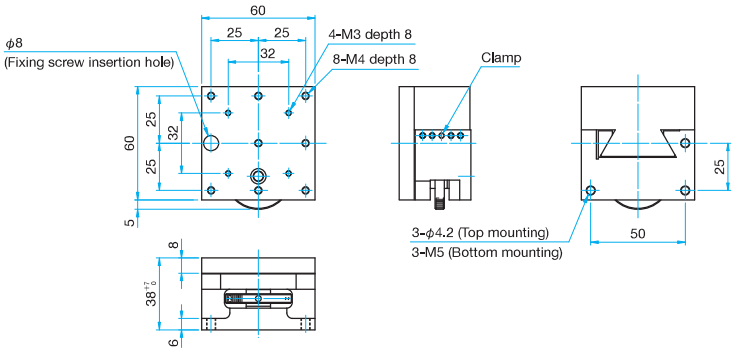

TASB-653-M6/653UU

Hexagonal socket head cap screw M6×12…3 screws, One 1.5mm hex wrench for Clamp, One 5mm hex wrench (M6)
Hexagonal socket head cap screw 1/4-20UNC×1/2…3 screws, One 1.5mm hex wrench for Clamp, One 3/16inch hex wrench (UU)

hex wrench size for Clamp 1.5mm, hex wrench size 5mm (M6)
hex wrench size for Clamp 1.5mm, 3/16inch hex wrench (UU)

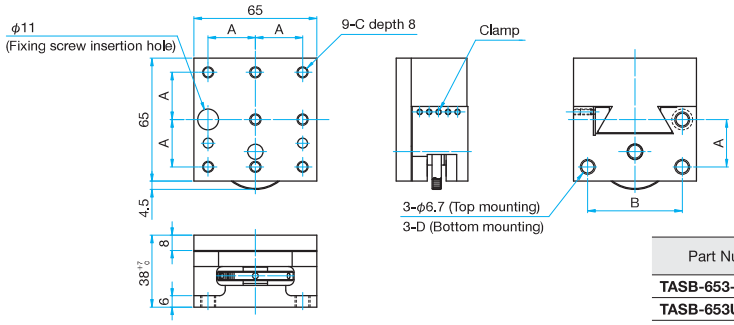

Part Number	A (mm)	B (mm)	C	D
TASB-653-M6	25	50	M6	M8
TASB-653UU	25.4	50.8	1/4-20UNC	5/16-18UNC

Z Axis Rack and Pinion Dovetail Translation Stages (Vertical) TARW-L RoHS Catalog Code W7052
Z Axis Rack and Pinion Dovetail Translation Stages (Vertical) TAR-L RoHS Catalog Code W7053

Z axis rack and pinion dovetail translation stages, suitable for frequent use that requires quick movement and long travel.

- The TAR series translation stages have dovetail rack and pinion guides.
- They are suitable for frequent operations that require quick motion and long travel.
- The model TAR-60553D model and TAR-60703D incorporates a course and fine adjustment.

TAR-34403L Bottom Plate

Primary material: Aluminum
Finish: Black Anodized

TAR-34403L include a base plate that allows mounting on instruments or bases fitted with M4 tapped holes on 50 × 50mm, preventing the handle from contacting the mounting surface.

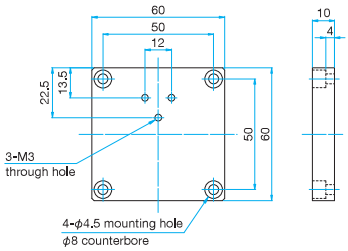

Specifications

Part Number	METRIC	TARW-25503L	TAR-34403L	TAR-34603L	TAR-34803L	TAR-38403L-M6	TAR-60553D	TAR-60703D
	INCH	–	–	–	–	TAR-38403LUU	–	–
Stage Size [mm]		25×50	34×40	34×60	34×80	38×40	60×60	60×60
Axes of Travel		Z axis						
Travel [mm]		±10	+25 / –20	±15	+20 / –10	+25 / –20	Coars: +18 / –0 Fine: +18 / –0	Coars: +33 / –0 Fine: +33 / –0
Lead of Actuator [mm/rotation]		about 20	about 20	about 20	about 20	about 20	Coars: about 20 Fine: about 2.5	Coars: about 20 Fine: about 2.5
Vernier Readable Resolution [mm]		0.1	0.1	0.1	0.1	0.1	0.1	0.1
Guide Method		Dovetail slide method						
Primary Material		Brass / Aluminum						
Finish		Super black chrome / Black anodized						
Load Capacity [N]		9.8 (1.0kgf)	14.7 (1.5kgf)	14.7 (1.5kgf)	14.7 (1.5kgf)	14.7 (1.5kgf)	14.7 (1.5kgf)	14.7 (1.5kgf)
Travel Accuracy	Straightness [μm]	30	20	20	30	30	20	20
Max. Moment Capacity	Pitch [N·m]	0.6	1.5	1.4	1.9	1.5	1.5	1.5
	Roll [N·m]	0.5	1.0	1.2	1.5	1.0	1.0	1.0
Moment Stiffness	Pitch [″/N·cm]	1.53	0.51	0.41	0.41	0.51	0.61	0.61
Parallelism [μm]		–	–	–	–	–	80	80
Squareness [μm]		50	50	100	100	50	–	–
Weight [kg]		0.3	0.5	0.8	1.1	0.6	0.55	0.6

2D CAD 3D CAD

Outline Drawing

TARW-25503L

Pan head screw M3×10…2 screws
Pan head screw M4×10…2 screws

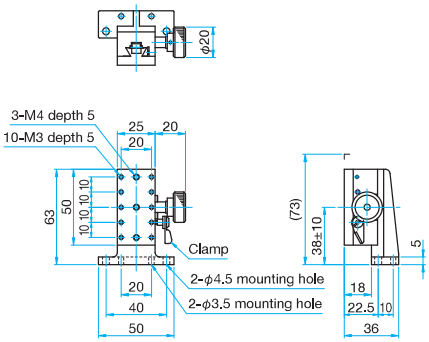

TAR-34403L

Hexagonal socket head cap screw M4×8…4 screws

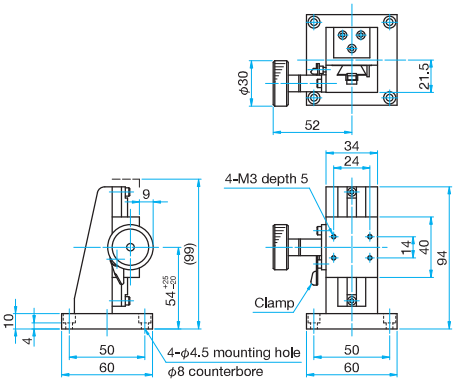

TAR-34603L

Hexagonal socket head cap screw M4×12…4 screws

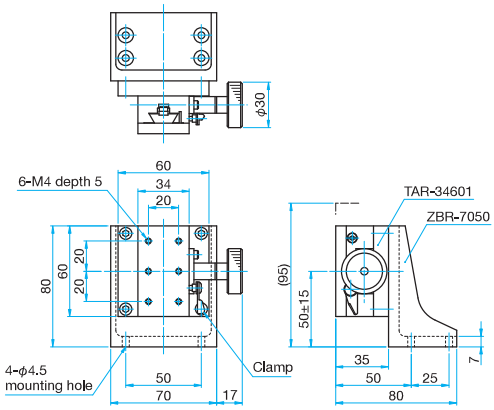

TAR-34803L

Hexagonal socket head cap screw M4×12…4 screws

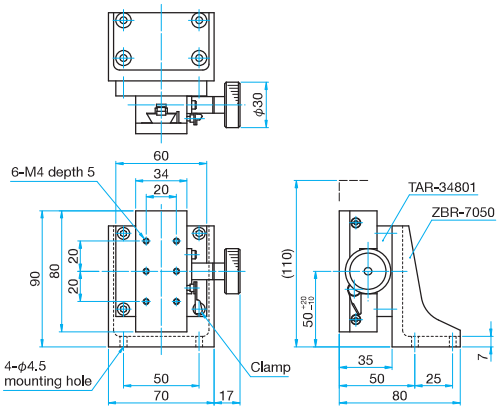

TAR-38403L-M6/38403LUU

Hexagonal socket head cap screw M6×10…4 screws (M6)
Hexagonal socket head cap screw 1/4-20UNC×3/8…4 screws (UU)

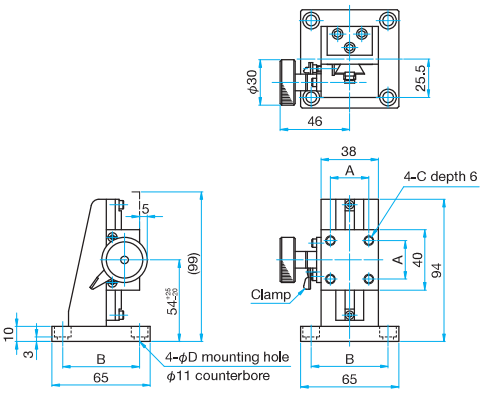

Part Number	A (mm)	B (mm)	C	D (mm)
TAR-38403L-M6	25	50	M6	6.5
TAR-38403LUU	25.4	50.8	1/4-20UNC	7

TAR-60553D

Hexagonal socket head cap screw M4×8…4 screws

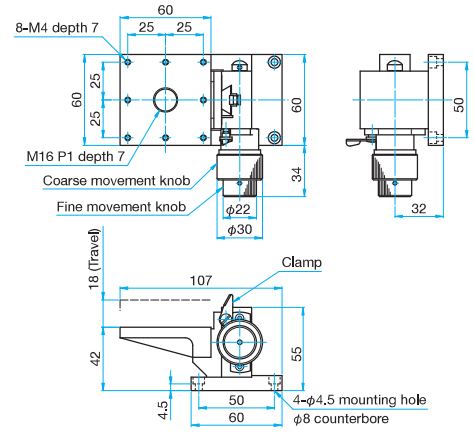

TAR-60703D

Hexagonal socket head cap screw M4×8…4 screws

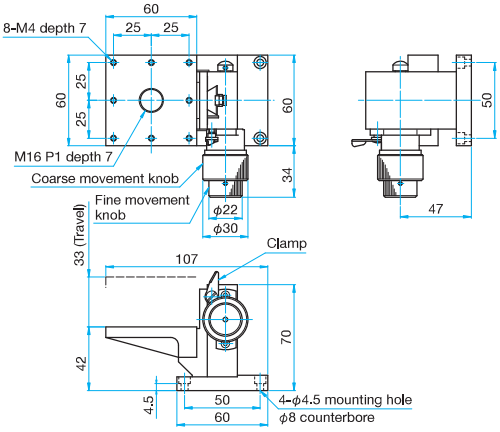

Z Axis Long Travel Leadscrew Translation Stages

Stage Size 160 × 160 mm Platform

LSV

RoHS

Long travel, high precision, leadscrew stages for Z-axis adjustment.

- Suitable for relatively less frequent operations that require long travel.
- Convenient crank style handle for adjustment.
- Tapped holes on the table top allow use in combination with other fine drive stages.

Application Systems
Optics & Optical Coatings
Opto-Mechanics
Bases
Manual Stages
Actuators & Adjusters
Motoeized Stages
Light Sources & Laser Safety
Index
Guide
X Axis Stages
XY Axis Stages
Z Axis Stages
XZ Axis Stages
XYZ Axis Stages
Rotation Stages
Goniometer
Tilt Stages
Vacuum
Ball Bearing Guide
Crossed Roller
Dovetail
Lapping
V Groove Screw
Ohters
15 × 15 mm
25 × 25 mm
40 × 40 mm
60 × 60 mm
65 × 65 mm
80 × 80 mm
100 × 100 mm
120 × 120 mm
Others

Specifications

Part Number	METRIC	LSV-16100L	LSV-16100L-M6	LSV-16200L	LSV-16200L-M6
	INCH	—	LSV-16100LUU	—	LSV-16200LUU
Stage Size [mm]		160×160			
Axes of Travel		Z axis			
Screw Pitch [mm]		2	2	2	2
Readable Resolution [mm]		1	1	1	1
Travel [mm]		±50	±50	±100	±100
Guide Method		Linear bearing			
Primary Material		Aluminum			
Finish		Black anodized			
Load Capacity [N]		78.4 (8.0kgf)	78.4 (8.0kgf)	78.4 (8.0kgf)	78.4 (8.0kgf)
Travel Accuracy	Straightness [μm]	10	10	10	10
Max. Moment Capacity	Pitch [N·m]	4.9	4.9	4.9	4.9
Moment Stiffness	Pitch [″/N·cm]	0.36	0.36	0.71	0.71
Weight [kg]		4.7	4.7	5.3	5.3

2D CAD 3D CAD

Outline Drawing

LSV-16100L/16200L

Hexagonal socket head cap screw M6×25…4 screws, Spring washers, Flat washers

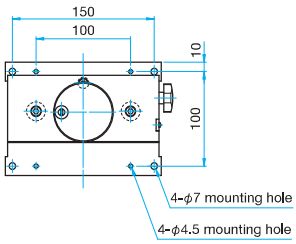

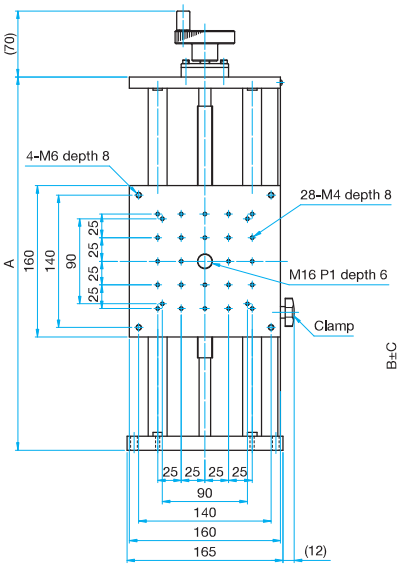

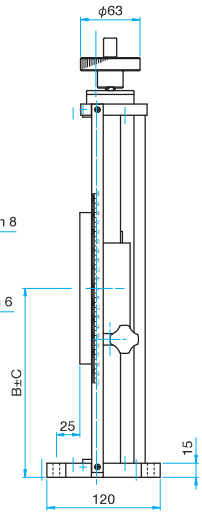

Part Number	A (mm)	B (mm)	D (mm)
LSV-16100L	295	150	50
LSV-16200L	395	200	100

LSV-16100L-M6/16200L-M6

Hexagonal socket head cap screw M6×25…4 screws, Spring washers, Flat washers

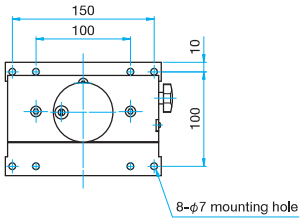

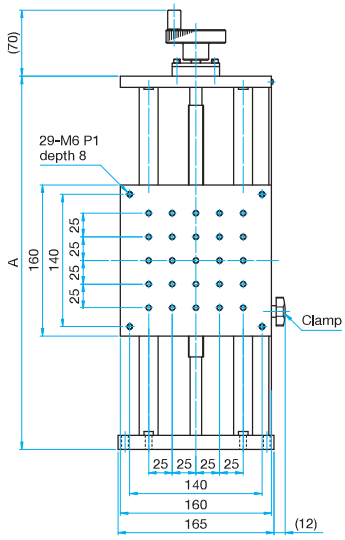

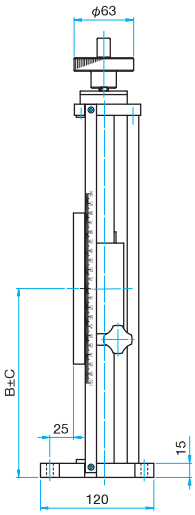

Part Number	A (mm)	B (mm)	D (mm)
LSV-16100L-M6	295	150	50
LSV-16200L-M6	395	200	100

LSV-16100LUU/16200LUU

Hexagonal socket head cap screw 1/4-20UNC×1…4 screws, Spring washers, Flat washers

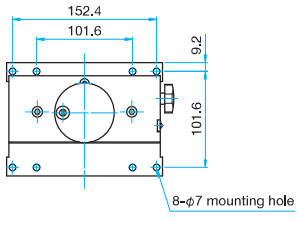

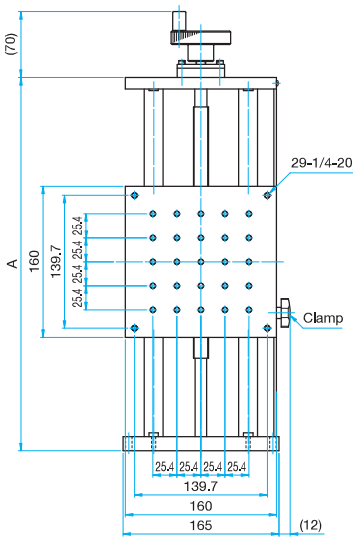

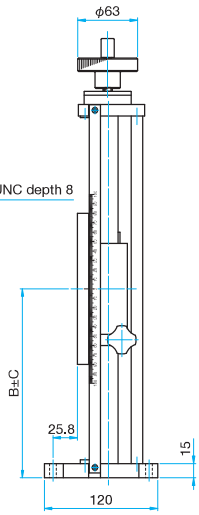

Part Number	A (mm)	B (mm)	D (mm)
LSV-16100LUU	295	150	50
LSV-16200LUU	395	200	100

Precision Labjacks | LJ/LJA

RoHS

Application Systems
Optics & Optical Coatings
Opto-Mechanics
Bases
Manual Stages
Actuators & Adjusters
Motoeized Stages
Light Sources & Laser Safety
Index
Guide
X Axis Stages
XY Axis Stages
Z Axis Stages
XZ Axis Stages
XYZ Axis Stages
Rotation Stages
Goniometer
Tilt Stages
Vacuum
Ball Bearing Guide
Crossed Roller
Dovetail
Lapping
V Groove Screw
Ohters
15 × 15 mm
25 × 25 mm
40 × 40 mm
60 × 60 mm
65 × 65 mm
80 × 80 mm
100 × 100 mm
120 × 120 mm
Others

Z axis precision stages that achieve extremely high parallelism using OptoSigma's unique adjustment technology.

- The top and bottom plates of the LJ model are made of steel (magnetic bases can be attached and detached), and the LJA models are made of aluminum.
- Pantograph mechanism provides a large adjustment range and high load capacity.
- Rotate the adjustment knob to adjust the height.
- Fine pitch lead screw enables good sensitivity.
- Stable locking is achieved with a split clamp system.

Guide

- Height is adjustable using the spacer kits (LJS).
  Reference E120 Catalog Code W7056
- Use the platform (LJP) to mount larger samples.
  Reference E118 Catalog Code W7057
- $\alpha(\beta)$ axis tilt stage (AIS) in the same size as the labjack can be mounted.
  Reference E200 Catalog Code W7110

Travel Variation Per Adjustment Handle Rotation

LJ/LJA-80133

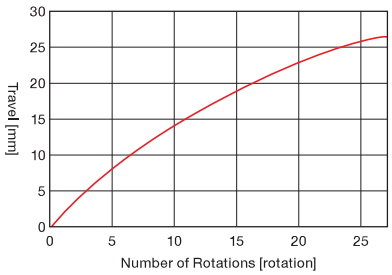

LJ/LJA-10163

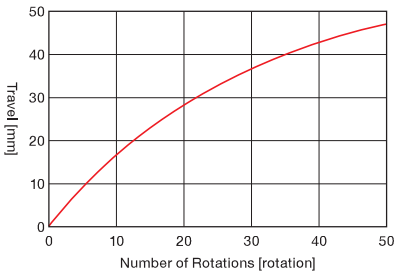

LJ/LJA-16223

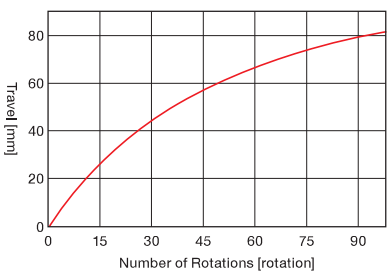

Specifications

Part Number		LJ-80133	LJA-80133	LJ-10163	LJA-10163	LJ-16223	LJA-16223
Stage Size [mm]		80×132	80×132	100×160	100×160	160×220	160×220
Axes of Travel		Z axis					
Travel [mm]		22	22	40	40	70	70
Primary Material		Steel	Aluminum	Steel	Aluminum	Steel	Aluminum
Finish		Super black chrome	Black anodized	Super black chrome	Black anodized	Super black chrome	Black anodized
Load Capacity [N]		196 (20.0kgf)	196 (20.0kgf)	245 (25.0kgf)	245 (25.0kgf)	294 (30.0kgf)	294 (30.0kgf)
Max. Moment Capacity	Pitch [N·m]	29.4	29.4	38	38	49	49
	Roll [N·m]	2.9	2.9	4	4	6	6
Parallelism [µm]		100	100	100	100	100	100
Weight [kg]		3.1	2.3	5.3	3.4	9.9	5.9

2D CAD 3D CAD

Outline Drawing

LJ/LJA-80133

Hexagonal socket head cap screw
M6×12...4 screws,
One 5mm hex wrench

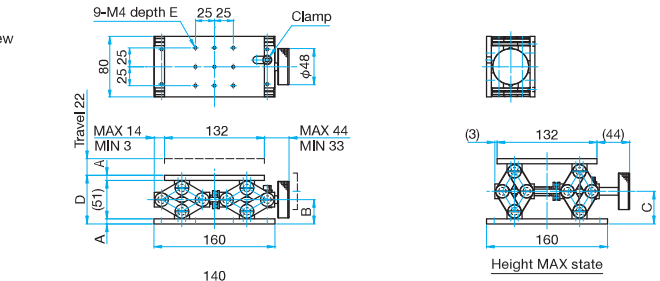

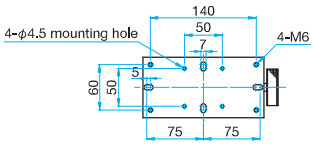

Part Number	External Dimensions					Remarks
	A	B	C	D	E	
LJ-80133	6.5	32	43	64	6.5	Top plate and bottom plate ST specifications
LJA-80133	6	31.5	42.5	63	6	Top plate and bottom plate AL specifications

LJ/LJA-10163

Hexagonal socket head cap screw
M6×16...4 screws,
One 5mm hex wrench

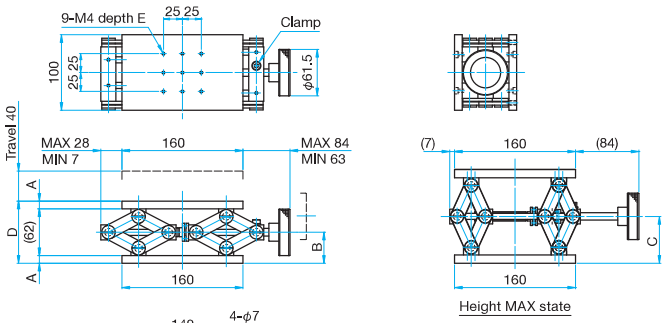

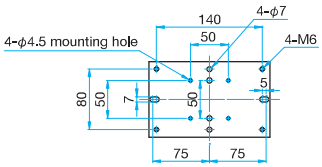

Part Number	External Dimensions					Remarks
	A	B	C	D	E	
LJ-10163	11	42	62	84	11	Top plate and bottom plate ST specifications
LJA-10163	10	41	61	82	10	Top plate and bottom plate AL specifications

LJ/LJA-16223

Hexagonal socket head cap screw
M6×16...4 screws,
One 5mm hex wrench

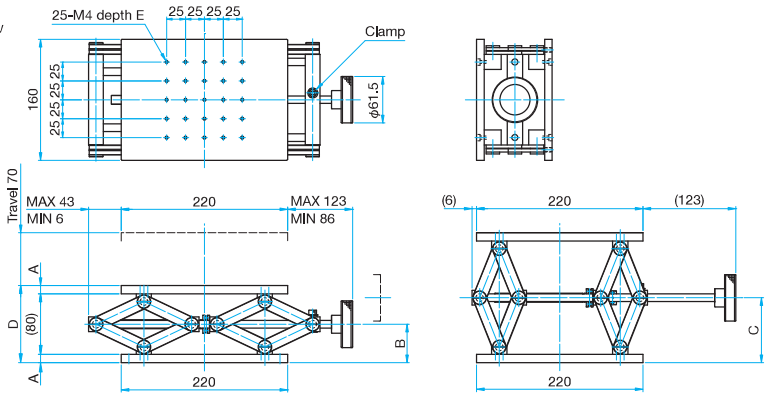

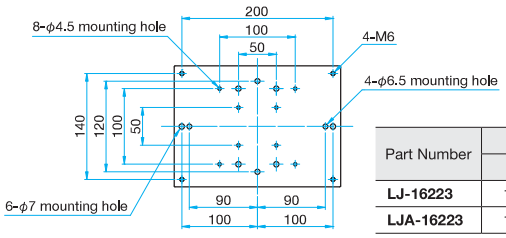

Part Number	External Dimensions					Remarks
	A	B	C	D	E	
LJ-16223	11	51	86	102	11	Top plate and bottom plate ST specifications
LJA-16223	10	50	85	100	10	Top plate and bottom plate AL specifications

Precision Labjacks | LJA-M6/LJA-UU

RoHS

Z axis precision stages that achieve extremely high parallelism using OptoSigma's unique adjustment technology.

- The top and bottom plates of the LJ model are made of steel (magnetic bases can be attached and detached), and the LJA models are made of aluminum.
- Pantograph mechanism provides a large adjustment range and high load capacity.
- Rotate the adjustment knob to adjust the height.
- Fine pitch lead screw enables good sensitivity.
- Stable locking is achieved with a split clamp system.

Guide

▶Use the platform (LJP) to mount larger samples.
Reference E118 Catalog Code W7057

Travel Variation Per Adjustment Handle Rotation

LJA-80133-M6/UU

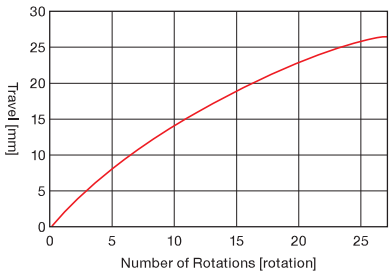

LJA-10163-M6/UU

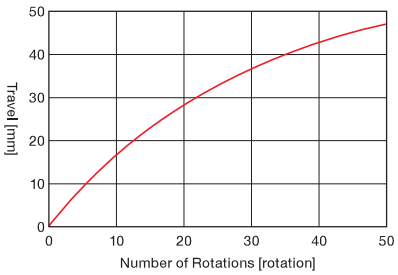

LJA-16223-M6/UU

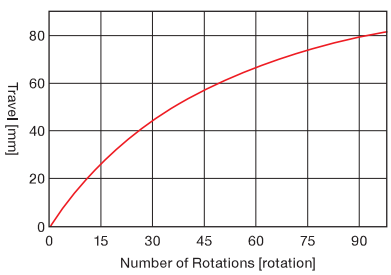

Specifications

Part Number	METRIC	LJA-80133-M6	LJA-10163-M6	LJA-16223-M6
	INCH	LJA-80133UU	LJA-10163UU	LJA-16223UU
Stage Size [mm]		80×132	100×160	170×210
Axes of Travel		Z axis		
Travel [mm]		22	40	70
Primary Material		Aluminum		
Finish		Black anodized		
Load Capacity [N]		196 (20Kgf)	245 (25Kgf)	294 (30Kgf)
Max. Moment Capacity	Pitch [N·m]	29.4	38	49
	Roll [N·m]	2.9	4	6
Parallelism [µm]		100	100	100
Weight [kg]		2.3	3.4	5.9

Application Systems
Optics & Optical Coatings
Opto-Mechanics
Bases
Manual Stages
Actuators & Adjusters
Motoeized Stages
Light Sources & Laser Safety
Index
Guide
X Axis Stages
XY Axis Stages
Z Axis Stages
XZ Axis Stages
XYZ Axis Stages
Rotation Stages
Goniometer
Tilt Stages
Vacuum
Ball Bearing Guide
Crossed Roller
Dovetail
Lapping
V Groove Screw
Ohters
15 × 15 mm
25 × 25 mm
40 × 40 mm
60 × 60 mm
65 × 65 mm
80 × 80 mm
100 × 100 mm
120 × 120 mm
Others

2D CAD 3D CAD

Outline Drawing

LJA-80133-M6/80133UU

Hexagonal socket head cap screw M6×12…4 screws,
One 5mm hex wrench (M6)
Hexagonal socket head cap screw 1/4-20UNC×1/2…4 screws,
One 5mm hex wrench (UU)

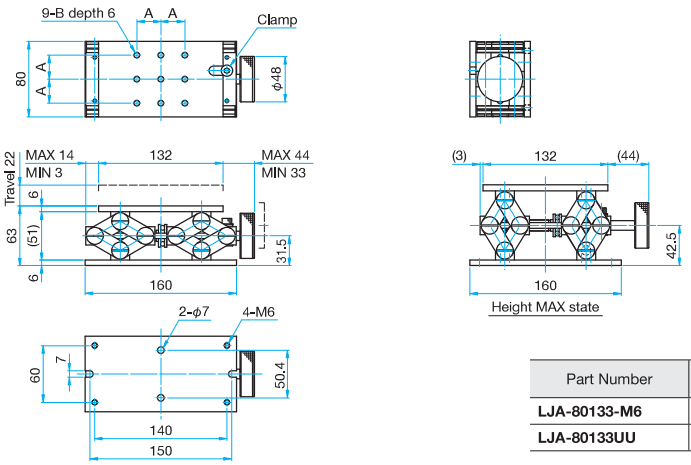

Part Number	A (mm)	B
LJA-80133-M6	25	M6 P1
LJA-80133UU	25.4	1/4-20UNC

LJA-10163-M6/10163UU

Hexagonal socket head cap screw M6×12…4 screws,
One 5mm hex wrench (M6)
Hexagonal socket head cap screw 1/4-20UNC×1/2…4 screws,
One 5mm hex wrench (UU)

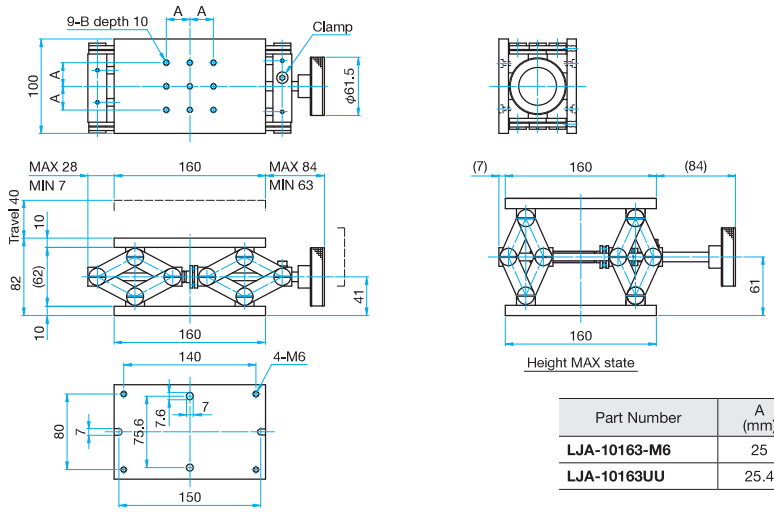

Part Number	A (mm)	B
LJA-10163-M6	25	M6 P1
LJA-10163UU	25.4	1/4-20UNC

LJA-16223-M6/16223UU

Hexagonal socket head cap screw M6×12…4 screws,
One 5mm hex wrench (M6)
Hexagonal socket head cap screw 1/4-20UNC×1/2…4 screws,
One 5mm hex wrench (UU)

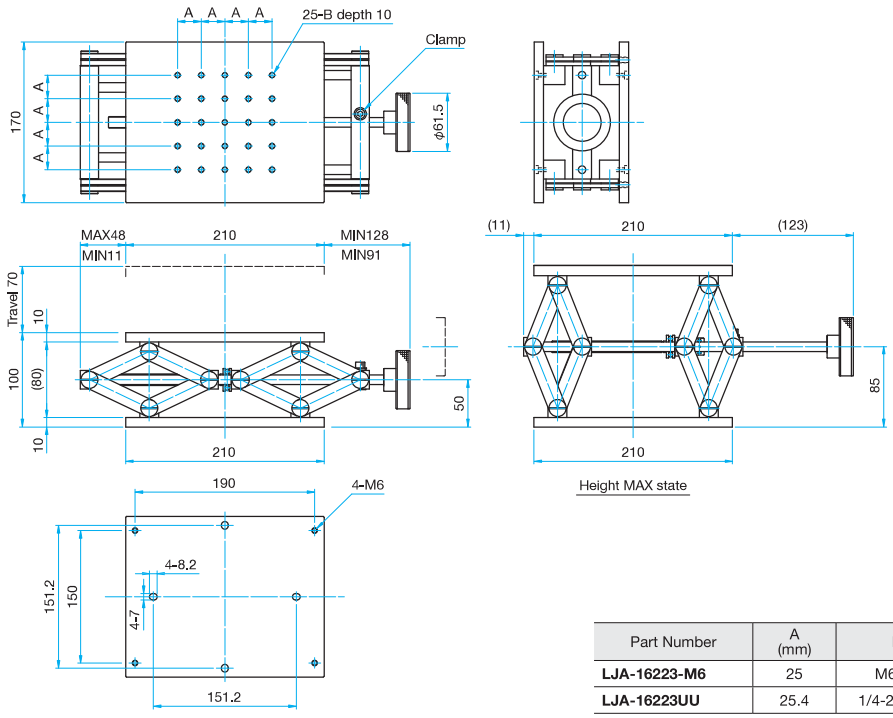

Part Number	A (mm)	B
LJA-16223-M6	25	M6 P1
LJA-16223UU	25.4	1/4-20UNC

Platform for Labjacks | LJP

RoHS

Platform for precision labjacks (LJ/LJA).
Larger items can be mounted by changing the platform.

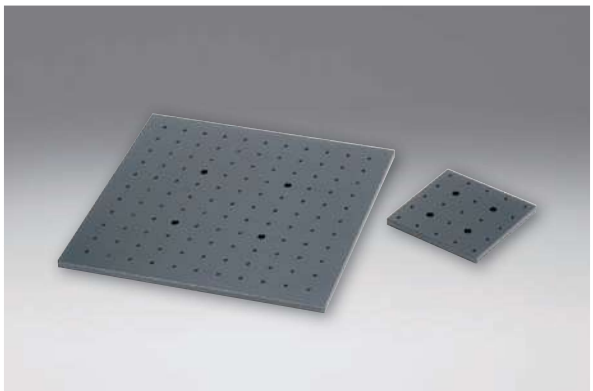

Guide

- We can manufacture custom sizes upon request. Contact Sales Division for more information.
- For use as a simplified optical baseplate for configuring small optical systems.
- Platforms with grip handles (OBC) that have M4 or M6 tapped holes (25mm spacing) is also available.

Reference D034 Catalog Code W6032

2D CAD 3D CAD

Outline Drawing

LJP-120

Hexagonal socket head cap screw M4×12...4 screws

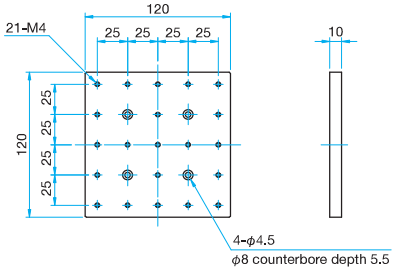

LJP-200

Hexagonal socket head cap screw M4×12...4 screws

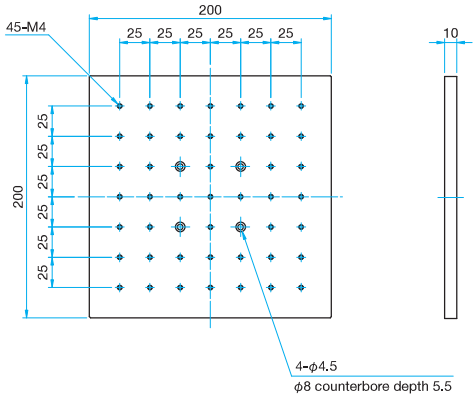

LJP-300

Hexagonal socket head cap screw M4×12...4 screws

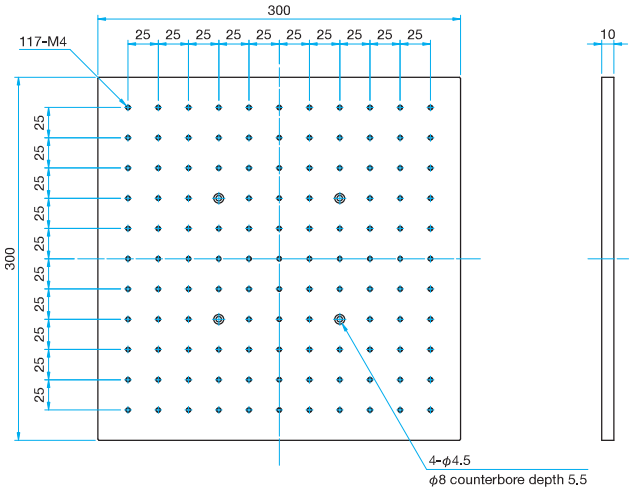

Specifications

Part Number	LJP-120	LJP-200	LJP-300
Size [mm]	120×120	200×200	300×300
Primary Material	Aluminum		
Finish	Black anodized		
Weight [kg]	0.4	1.1	2.4

Application Systems
Optics & Optical Coatings
Opto-Mechanics
Bases
Manual Stages
Actuators & Adjusters
Motoeized Stages
Light Sources & Laser Safety
Index
Guide
X Axis Stages
XY Axis Stages
Z Axis Stages
XZ Axis Stages
XYZ Axis Stages
Rotation Stages
Goniometer
Tilt Stages
Vacuum
Ball Bearing Guide
Crossed Roller
Dovetail
Lapping
V Groove Screw
Ohters
15 × 15 mm
25 × 25 mm
40 × 40 mm
60 × 60 mm
65 × 65 mm
80 × 80 mm
100 × 100 mm
120 × 120 mm
Others

2D CAD 3D CAD

Outline Drawing

LJP-200-M6/200-UU

Hexagonal socket head cap screw M6×10…4 screws (M6)
Hexagonal socket head cap screw 1/4-20UNC×3/8…4 screws (UU)

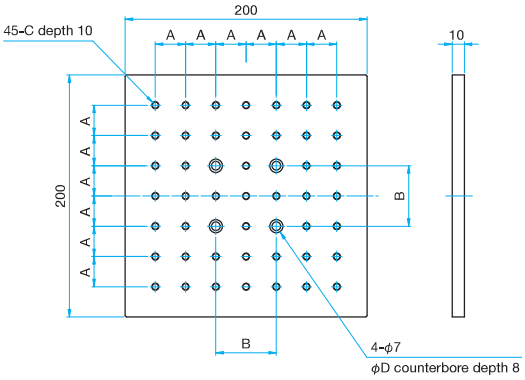

Part Number	A (mm)	B (mm)	C	D (mm)
LJP-200-M6	25	50	M6 P1	11
LJP-200-UU	25.4	50.8	1/4-20UNC	12

LJP-300-M6/300-UU

Hexagonal socket head cap screw M6×10…4 screws (M6)
Hexagonal socket head cap screw 1/4-20UNC×3/8…4 screws (UU)

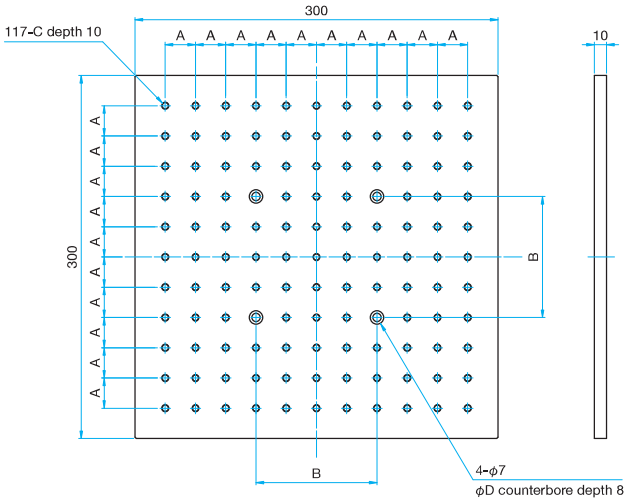

Part Number	A (mm)	B (mm)	C	D (mm)
LJP-300-M6	25	50	M6 P1	11
LJP-300-UU	25.4	50.8	1/4-20UNC	12

Specifications

Part Number	METRIC	**LJP-200-M6**	**LJP-300-M6**
	INCH	**LJP-200-UU**	**LJP-300-UU**
Size [mm]		200×200	300×300
Primary Material		Aluminum	
Finish		Black anodized	
Weight [kg]		1.1	2.4

Adjustable Spacer Kits for Labjacks | LJS

RoHS Catalog Code W7056

Spacer kits for precision labjacks (LJ/LJA).

- A kit contains one plate (made of steel) and three different lengths of posts, 20, 40 and 80mm (four posts for each). Height can be adjusted by combining these posts (height can be added to 20, 40, 60, 80, 100, 120 and 140mm).
- Refer to the outline drawing regarding the connection diagram to the precision labjacks.

LJS-1016

Guide

▶We can manufacture custom sizes upon request. Contact sales for more information.

Connection Example

2D CAD 3D CAD

Outline Drawing

LJS-8016

Hexagonal socket head cap screw M6×12…4screws, One 5mm hex wrench

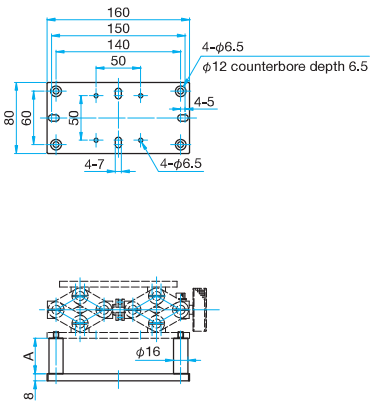

A [mm]
20
40
80

LJS-1016

Hexagonal socket head cap screw M6×12…4screws, One 5mm hex wrench

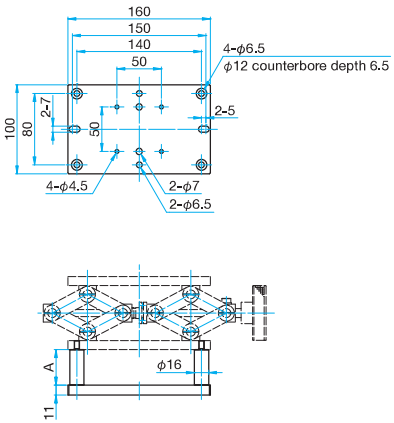

A [mm]
20
40
80

LJS-1622

Hexagonal socket head cap screw M6×12…4screws, One 5mm hex wrench

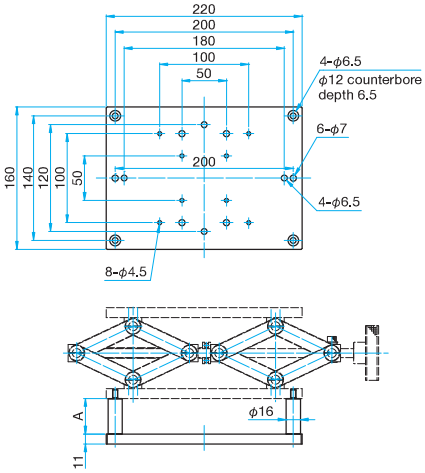

A [mm]
20
40
80

Specifications

Part Number	LJS-8016	LJS-1016	LJS-1622
Compatible Labjack Part Number	LJ-80133 LJA-80133	LJ-10163 LJA-10163	LJ-16223 LJA-16223
Primary Material	Steel	Steel	Steel
Finish	Super black chrome	Super black chrome	Super black chrome
Weight [kg]	1.7	2.2	3.9

* There are mounting holes of 4-Φ4.5 also □100mm on LJS-1622.

Application Systems
Optics & Optical Coatings
Opto-Mechanics
Bases
Manual Stages
Actuators & Adjusters
Motoeized Stages
Light Sources & Laser Safety
Index
Guide
X Axis Stages
XY Axis Stages
Z Axis Stages
XZ Axis Stages
XYZ Axis Stages
Rotation Stages
Goniometer
Tilt Stages
Vacuum
Ball Bearing Guide
Crossed Roller
Dovetail
Lapping
V Groove Screw
Ohters
15 × 15 mm
25 × 25 mm
40 × 40 mm
60 × 60 mm
65 × 65 mm
80 × 80 mm
100 × 100 mm
120 × 120 mm
Others

High Load Capacity Jacks
Stage Size 200 × 200 mm

TSM

RoHS Catalog Code W7505

Large scale, high load Z-axis "Jack" translation stage.

- By turning the larger whool adjustment knobs, the stage will move up and down. These knobs will move together because they are interlocked.
- The center stage aperture remains constant througout the travel range.

Guide

▶Stage Size is 300 × 300mm, 400 × 400mm also available. See our website. WEB Reference Catalog Code W7505

2D CAD 3D CAD

Outline Drawing

TSM-2003

Hexagonal socket head cap screw M6×15…8 screws, Flat washers

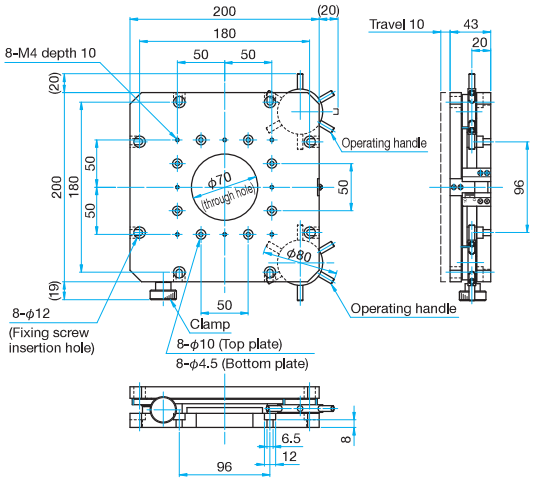

TSM-2003-M6/2003UU

Hexagonal socket head cap screw M6×15…8 screws, Flat washers (M6)
Hexagonal socket head cap screw 1/4-20UNC×5/8…8 screws (UU)

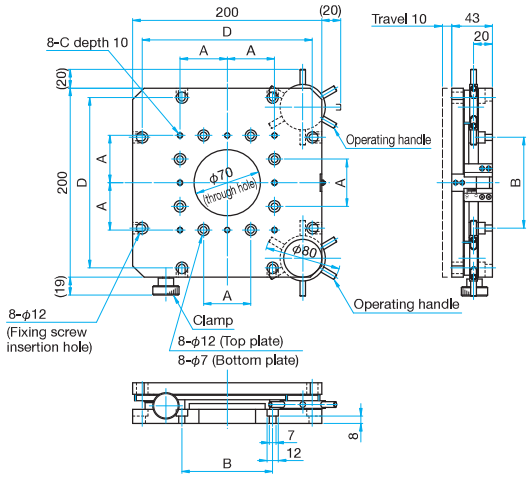

Part Number	A (mm)	B (mm)	C	D (mm)
TSM-2003-M6	50	96	M6 P1	180
TSM-2003UU	50.8	96	1/4-20UNC	177.8

Specifications

Part Number	METRIC	TSM-2003	TSM-2003-M6
	INCH	—	TSM-2003UU
Stage Size [mm]		200×200	200×200
Axes of Travel		Z axis	
Travel [mm]		10	10
Lead of Actuator [mm/rotation]		1.0	1.0
Readable Resolution [mm]		1	1
Guide Method		Jack screw method	
Primary Material		Aluminum	
Finish		Black anodized	
Load Capacity [N]		490 (50.0kgf)	490 (50.0kgf)
Travel Accuracy	Straightness [μm]	200	200
Max. Moment Capacity	Pitch [N·m]	4.9	4.9
	Roll [N·m]	4.9	4.9
Moment Stiffness	Pitch [″/N·cm]	0.05	0.05
	Roll [″/N·cm]	0.05	0.05
Parallelism [μm]		150	150
Weight [kg]		5.0	5.0